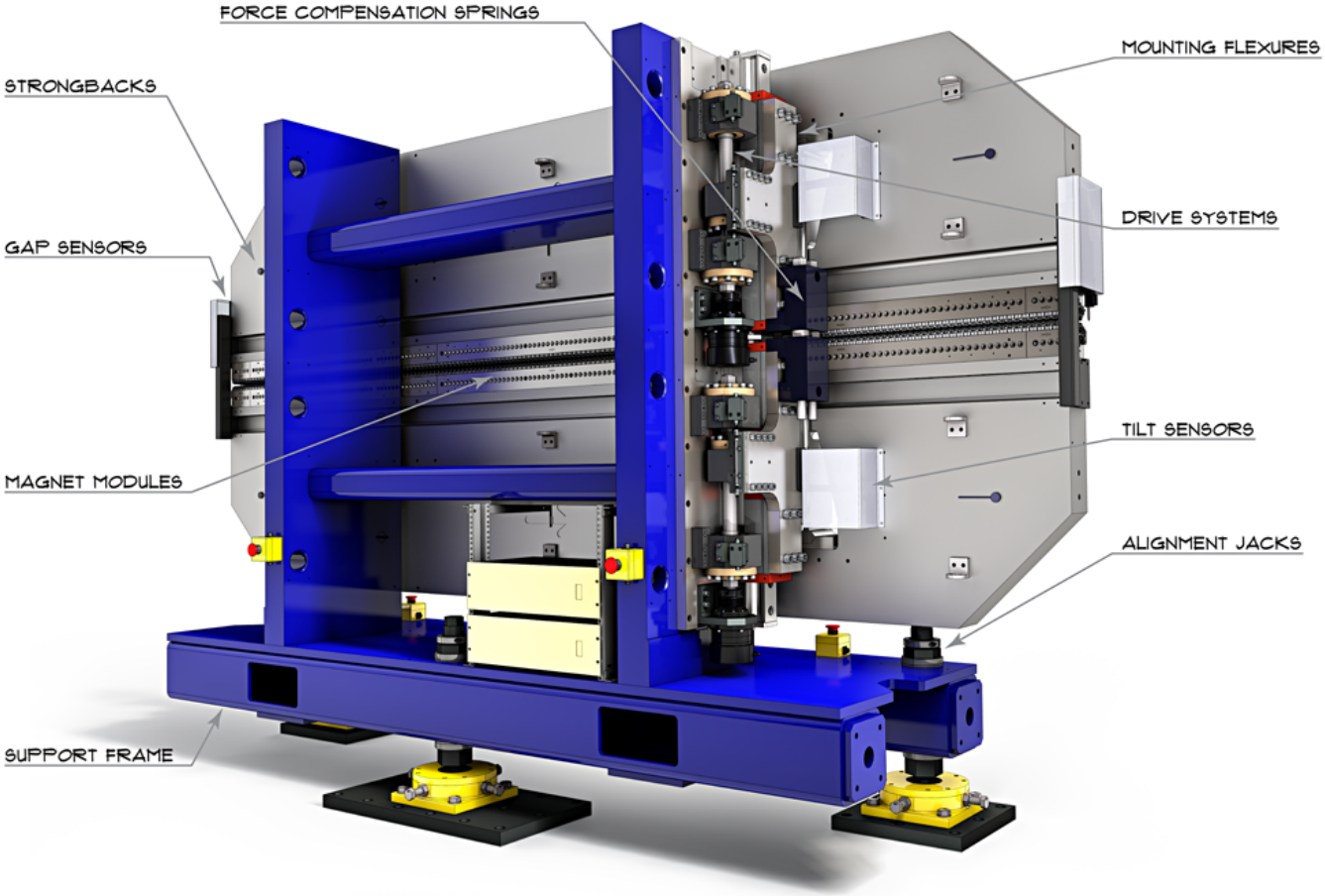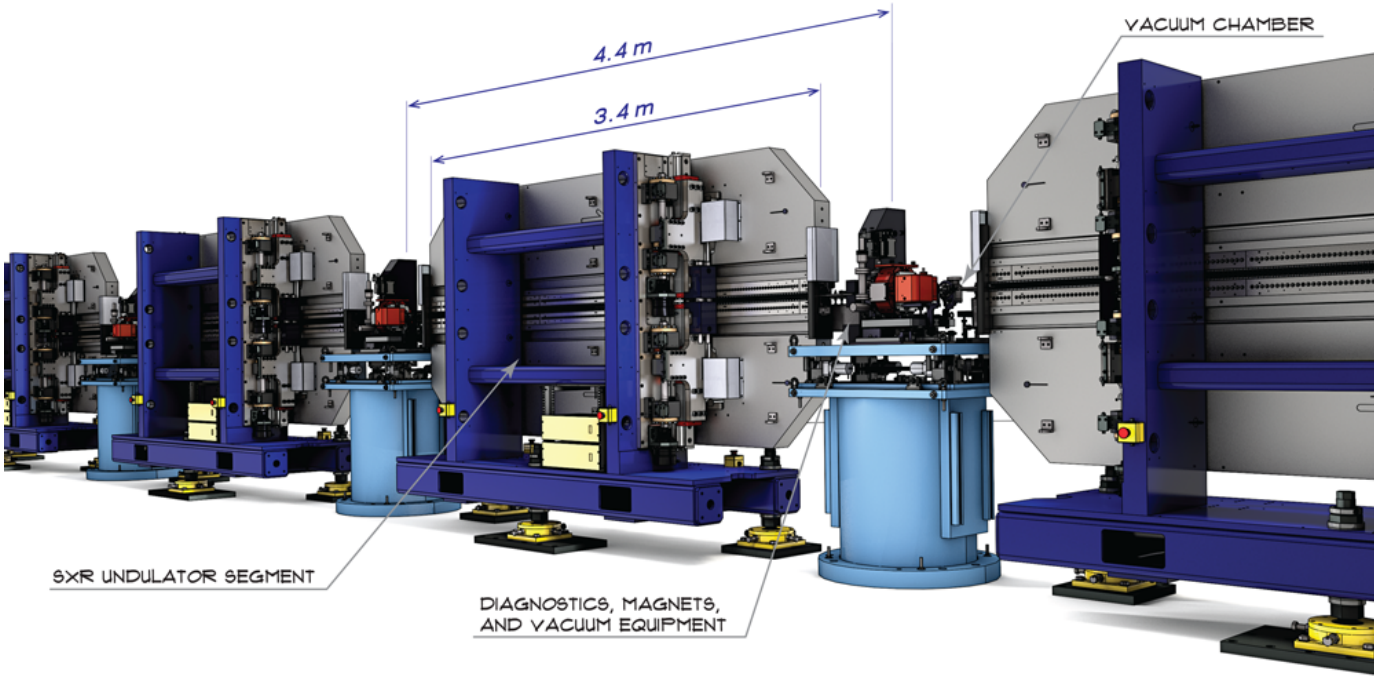LCLS II Undulators