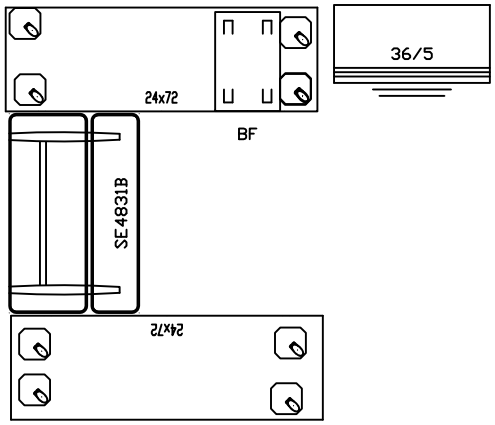

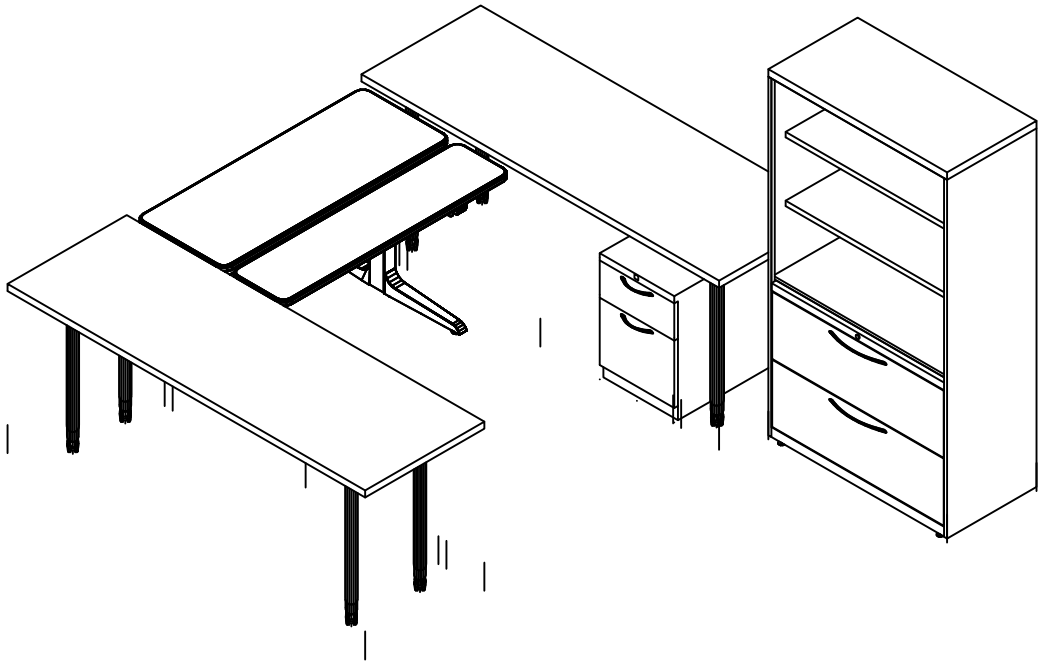

FREESTANDING ALLSTEEL TABLES
COMBINATION FILE
BOX/FILE PEDESTAL
WORKRITE ELECTRIC ADJ. TABLE

business interiors BY STAPLES

LBNL
"U" CONFIGURATION PRIVATE OFFICE TYPICAL
ALLSTEEL & WORKRITE