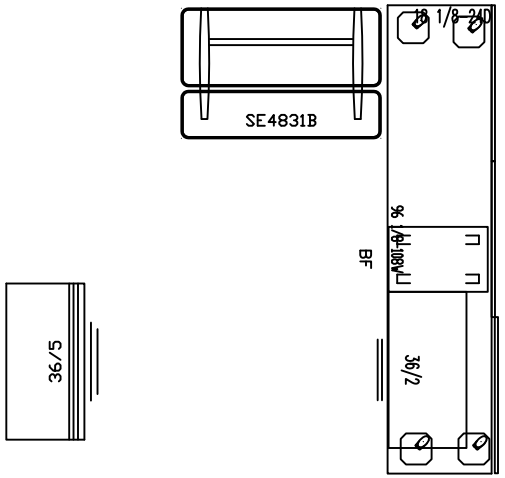

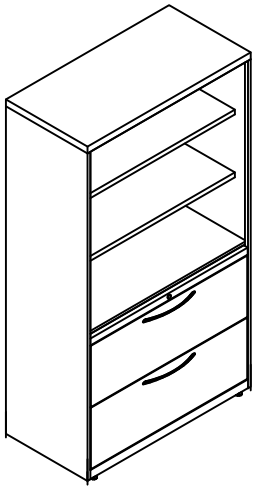

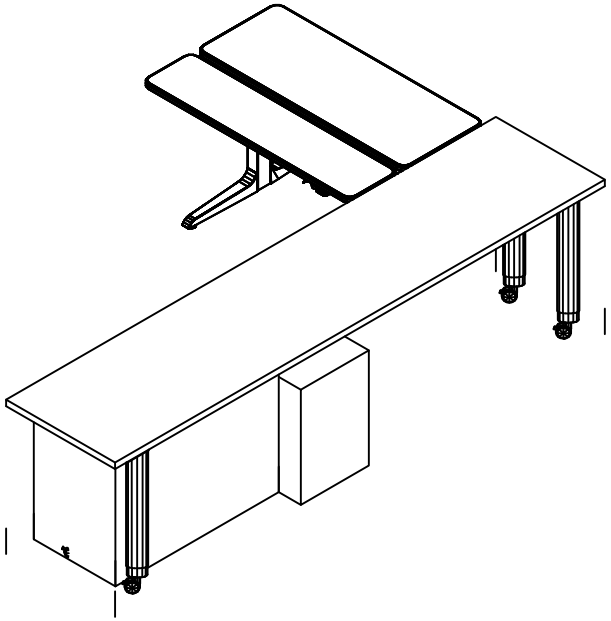

FREESTANDING ALLSTEEL TABLE
COMBINATION FILE
BOX/FILE PEDESTAL AND 36"W LATERAL FILE
WORKRITE ELECTRIC ADJ. TABLE

business interiors BY STAPLES

LBNL "L" CONFIGURATION PRIVATE OFFICE TYPICAL ALLSTEEL & WORKRITE