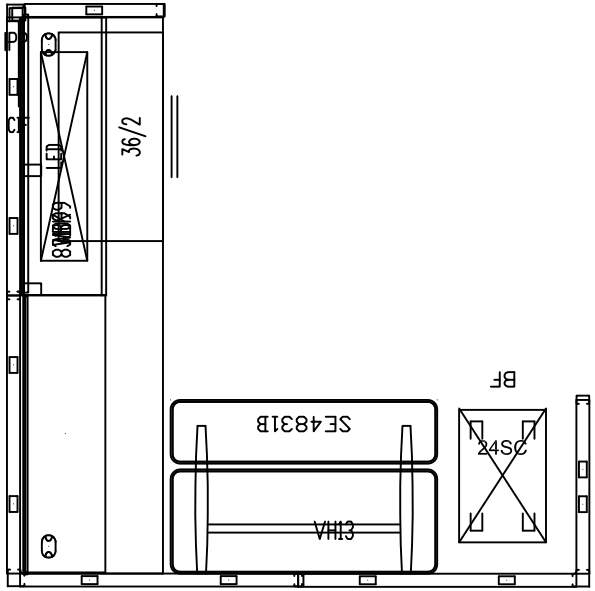

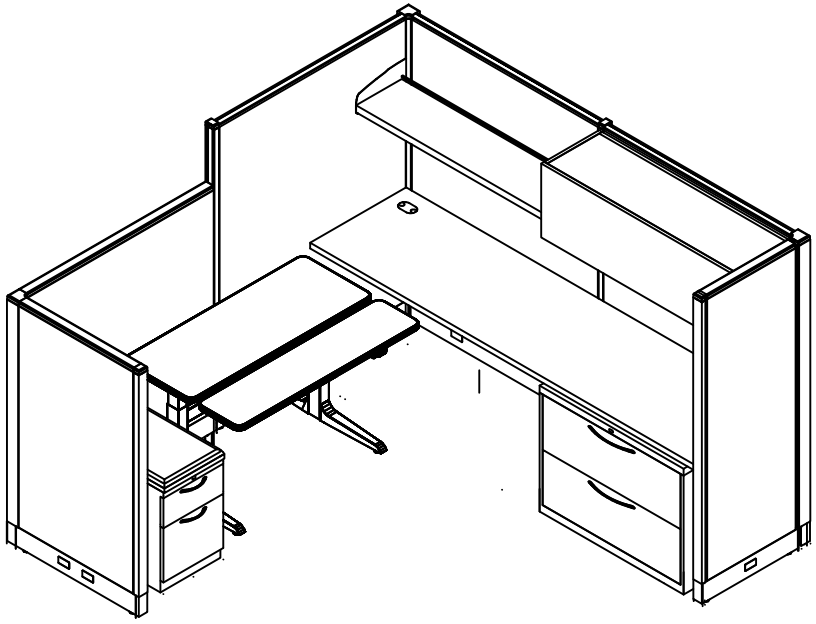

ALLSTEEL CONCENSYS 69" & 56"H PANELS
OVERHEAD AND SHELF STORAGE
B/F WITH CUSHION AND 36"W LATERAL FILE
WORKRITE ELECTRIC ADJ. TABLE

business interiors BY STAPLES

LBNL 8X8 WORKSTATION TYPICAL ALLSTEEL & WORKRITE