LBNL STANDARD
COMBINATION AIR RELIEF VALVE

UNIVERSITY OF CALIFORNIA LAWRENCE BERKELEY NATIONAL LABORATORY

FACILITIES DIVISION

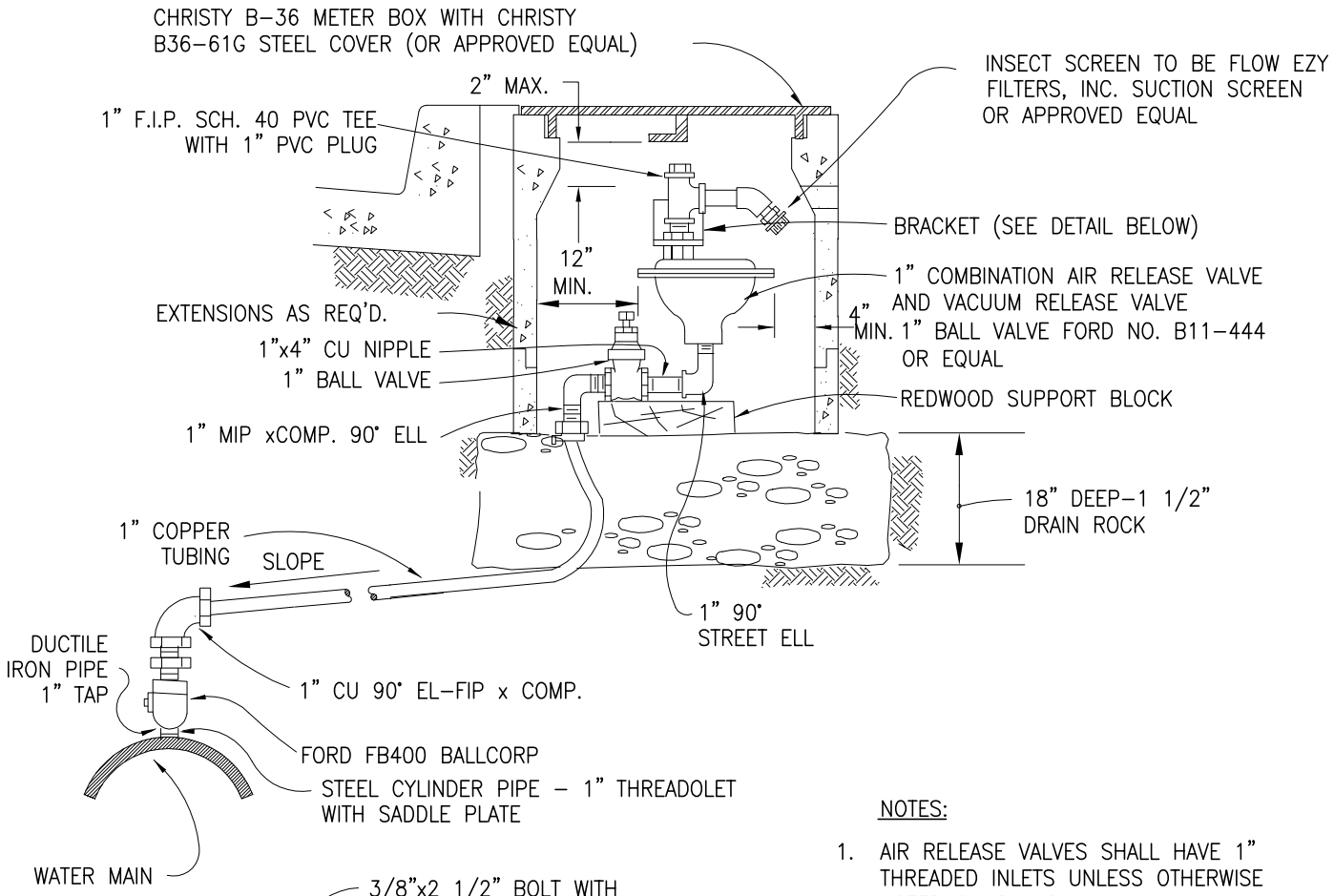

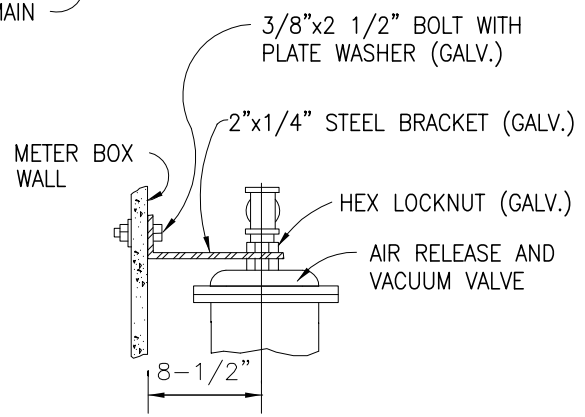

BRACKET DETAIL

NOTES:

1. AIR RELEASE VALVES SHALL HAVE 1" THREADED INLETS UNLESS OTHERWISE NOTED ON PLANS.
2. APPROVED COMBINATION VALVES: APCO NO.143C CRISPIN NO. U10
3. AIR RELEASE AND VACUUM VALVE SHALL BE INSTALLED ON THE HIGH HIGH SIDE OF RIGHT-OF-WAY OR EASEMENT.
3. FOR OF ROAD INSTALLATION, METER BOX SHOULD BE INSTALLED 2" ABOVE NATIVE SLOPE. SLOPE GRADE AT METER BOX AWAY AT A MIN. OF 1%

DRAWN BY	RZT	DATE 11/18/2010
CHECKED BY	MCD	11/18/2010
APPROVED BY	MCD	11/18/2010
SCALE	NOT TO SCALE	
DRAWING NO.	U151	SHEET 1 OF 1
PROJECT NO.		