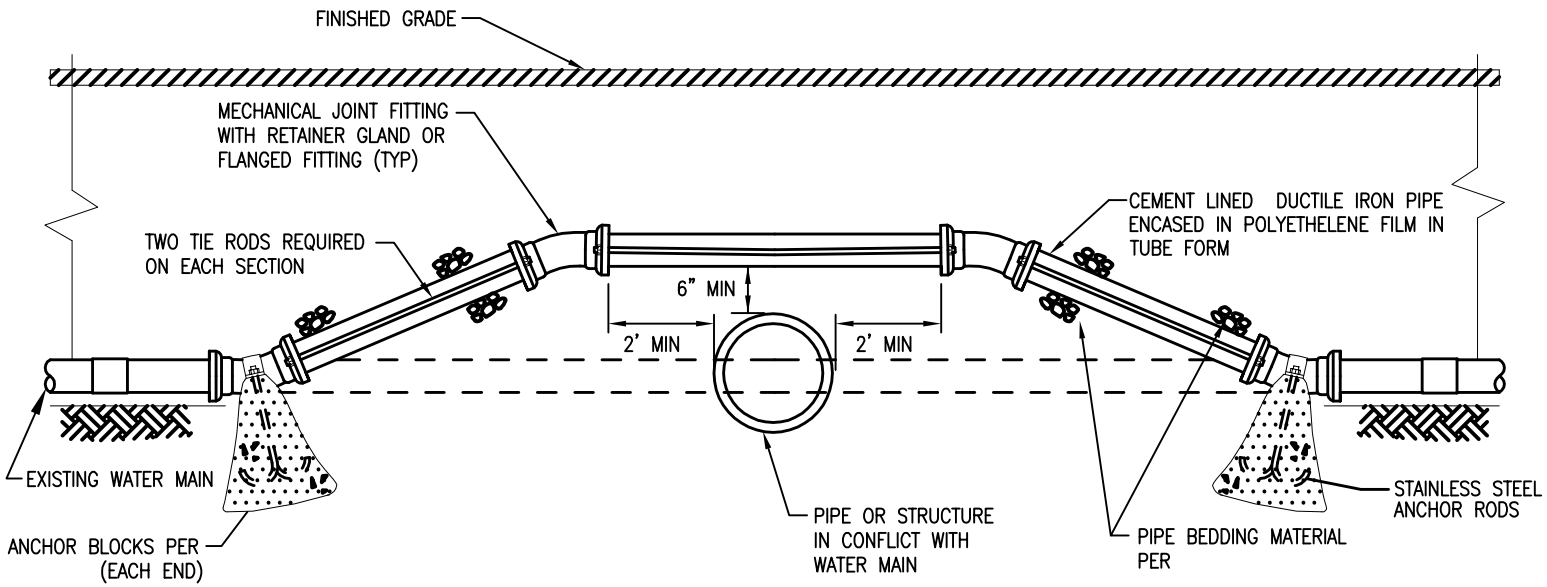

NOTES:

1. ALL PIPE & FITTINGS SHALL BE DUCTILE IRON & SHALL BE WRAPPED IN POLYETHELENE PER THE SPECIFICATIONS.
2. ONLY MECHANICAL JOINT FITTINGS WITH RETAINER GLANDS OR FLANGED FITTINGS MAY BE USED.
3. ALL BENDS SHALL BE 45° OR 22-1/2° FITTINGS – NO 90° BENDS ALLOWED.
4. TO BE USED ONLY WITH THE APPROVAL OF THE ENGINEER.
5. CL. 52 DUCTILE IRON REQUIRED WHERE COVER IS LESS THAN THAT REQUIRED BY THE GENERAL CONSTRUCTION NOTES.
6. REFER TO C-3 TO C-21 FOR LOCATIONS.

PIPE SIZE	TIE RODS
6"	5/8"
8"	3/4"
12"	1-1/8"

X
XX

TYPICAL WATER MAIN INSTALLATION OVER STRUCTURE

SCALE: NONE

LBNL STANDARD

TYPICAL WATER MAIN INSTALLATION OVER STRUCTURE

UNIVERSITY OF CALIFORNIA LAWRENCE BERKELEY NATIONAL LABORATORY

FACILITIES DIVISION

DRAWN BY | DATE
CHECKED BY
APPROVED BY
CAD FILE PATH
SCALE NTS
DRAWING NO. U147
PROJECT NO.
SHEET

G:\Capital Projects\Procedures, Standards & Forms\Standards\CDDG\CDDG_Vol 3_Const_Dts\Part-I - Civil_Site\SiteUtilities\U147 TYPICAL WATER MAIN INSTALLATION OVER STRUCTURE.dwg