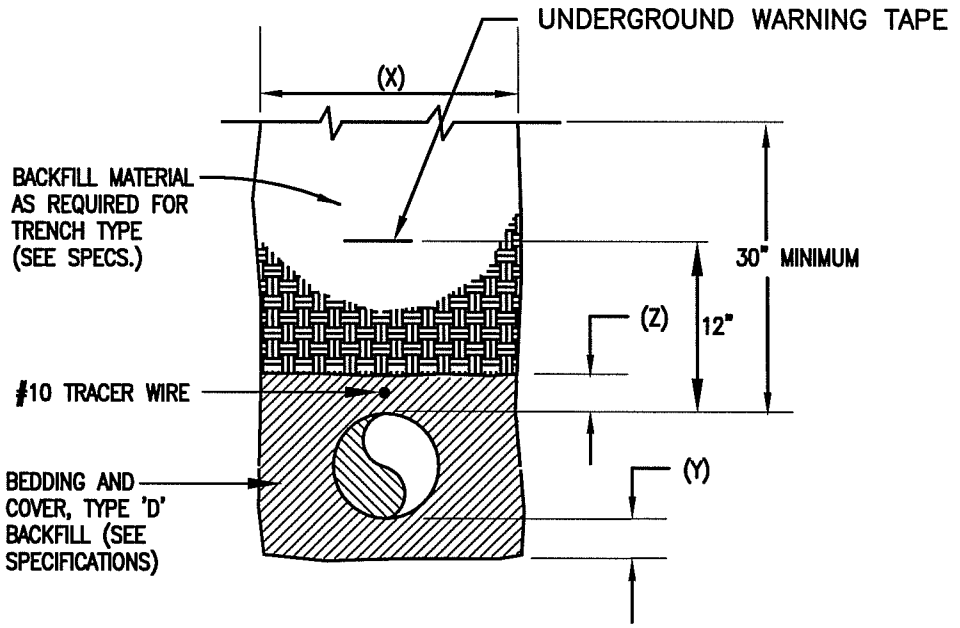

NOTES:

1. WIDER TRENCHES SHALL REQUIRE HIGHER STRENGTH PIPE AND/OR SPECIAL BEDDING.
2. DIFFERING TRENCH WIDTHS REQUIRE PRIOR APPROVAL OF ENGINEER.

TRENCH DIMENSION CHART

	(X)		(Y)	(Z)
PIPE SIZE	TRENCH WIDTH		BEDDING (MIN)	COVER (MIN)
	MIN	MAX		
2",4"&6"	18"	24"	3"	6"
8"	20"	26"	3"	6"
10"	22"	28"	4"	6"
12"	24"	30"	4"	6"

X / XX

TRENCH PIPE BEDDING DETAIL

SCALE: NONE

LBNL STANDARD
TRENCH–PIPE BEDDING DETAIL

DRAWN BY	DATE
CHECKED BY	
APPROVED BY	
CAD FILE PATH	
SCALE NTS	
DRAWING NO. U140	SHEET
PROJECT NO.	

UNIVERSITY OF CALIFORNIA LAWRENCE BERKELEY NATIONAL LABORATORY
FACILITIES DIVISION

T:\groups\ELECT\Romy\Mech_IHEM\U400–SiteUtilities\U140 TRENCH–PIPE–BEDDING–DETAIL.dwg