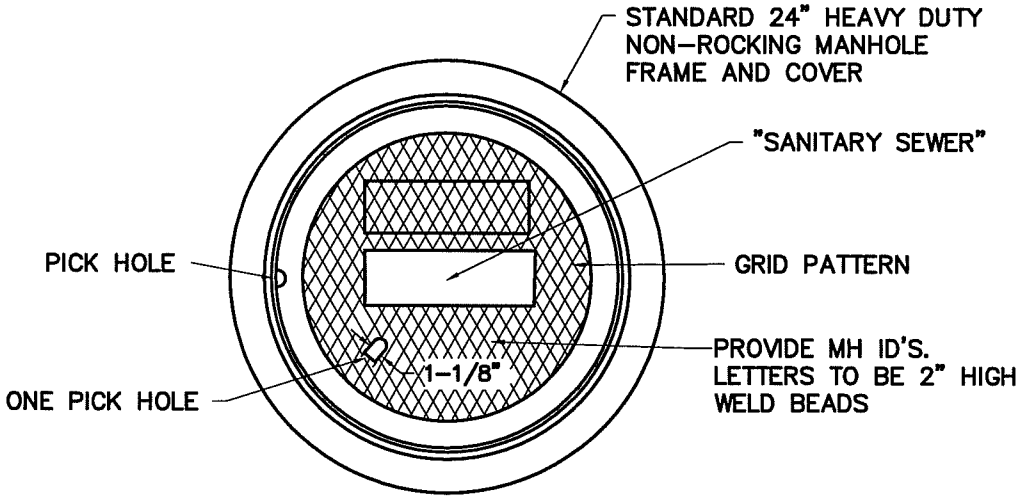

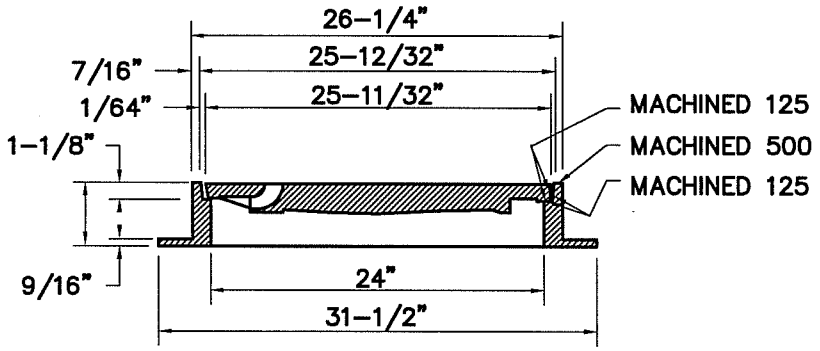

NOTES:

1. ALL CASTINGS SHALL BE DIPPED IN ASPHALT PAINT.
2. ALL MATERIAL USED IN MANUFACTURING SHALL CONFORM TO A.S.T.M. DESIGNATION A-159-G3000, OR OF UNITED STATES GOVERNMENT SPECIFICATIONS QQ1-652B.
3. MINIMUM WEIGHT COMPONENTS : COVER - 130 POUNDS
   FRAME - 135 POUNDS

X
XX

STANDARD MANHOLE FRAME & COVER

SCALE: NONE

LBNL STANDARD STANDARD MANHOLE FRAME & COVER	DRAWN BY	DATE
	CHECKED BY	
	APPROVED BY	
	CAD FILE PATH	
	SCALE NTS	
UNIVERSITY OF CALIFORNIA LAWRENCE BERKELEY NATIONAL LABORATORY FACILITIES DIVISION	DRAWING NO. U128	SHEET
	PROJECT NO.	

T:\groups\ELECT\Romy\Mech_IHEM\U400-SiteUtilities\U128 STAND--MANHOLE-FRAME&COVER.dwg