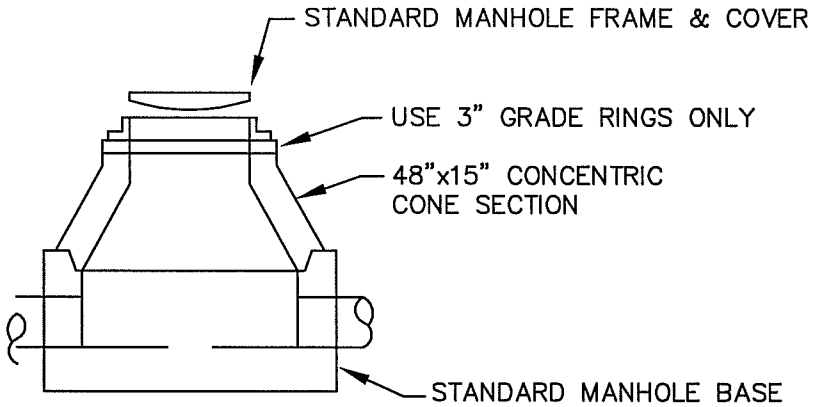

DETAIL 'A'

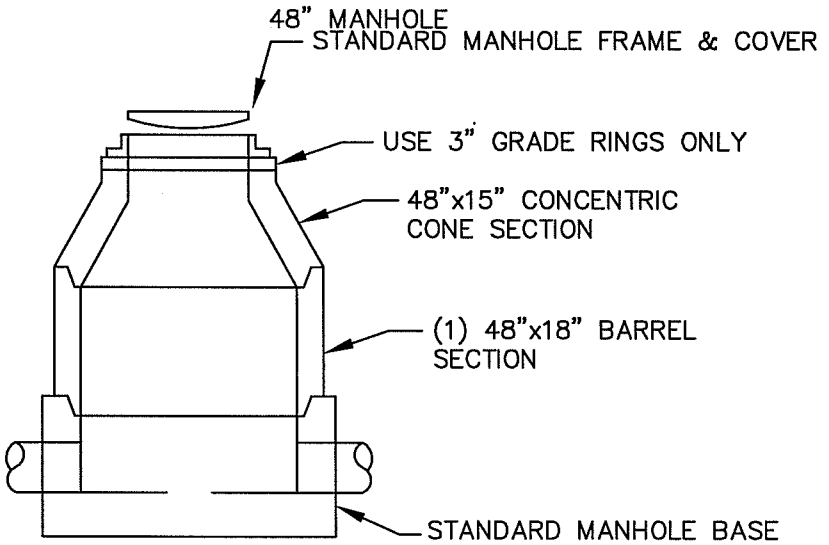

DETAIL 'B'

48" MANHOLE

X
XX

SHALLOW MANHOLE DETAIL

SCALE: NONE

LBNL STANDARD SHALLOW MANHOLE DETAIL	DRAWN BY	DATE
	CHECKED BY	
	APPROVED BY	
	CAD FILE PATH	
	SCALE NTS	
UNIVERSITY OF CALIFORNIA LAWRENCE BERKELEY NATIONAL LABORATORY FACILITIES DIVISION	DRAWING NO. U126	SHEET
	PROJECT NO.	

T:\groups\ELECT\Romy\Mech_IHEM\U400-SiteUtilities\U126 SHALLOW-MANHOLE-DETAIL.dwg