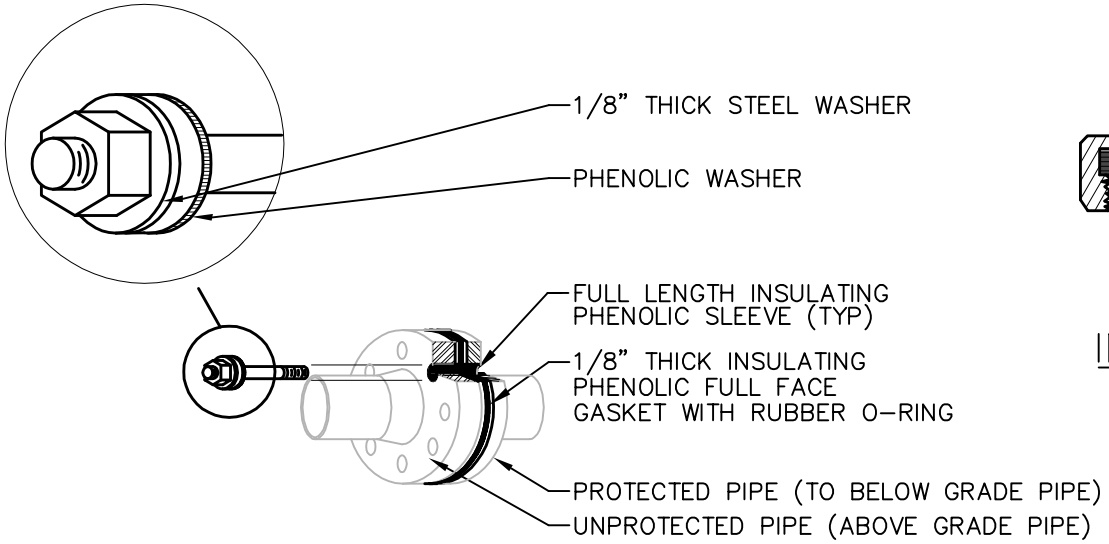

INSULATING FLANGE

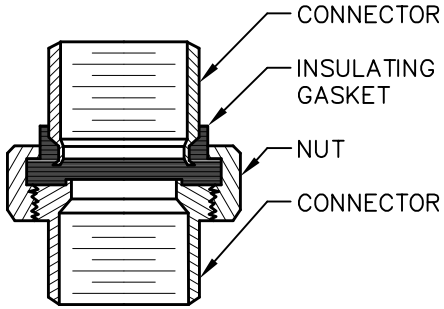

INSULATING UNION

NOTES:

1. FOR THE INSULATING FLANGE, INSTALL INSULATING WASHERS AND STEEL BACK WASHERS ON BOTH SIDES OF THE FLANGE.

2. FOR THE INSULATING UNION, UNION CONNECTORS MUST BE SAME MATERIAL AS CONNECTING PIPES AND NUT MUST BE SAME MATERIAL AS THREADED CONNECTOR.

X
XX

INSULATING FLANGE OR INSULATING UNION DETAIL

SCALE: NONE

SEE DETAILS U103 & U104

LBNL STANDARD

INSULATING FLANGE OR INSULATING UNION DETAIL

UNIVERSITY OF CALIFORNIA LAWRENCE BERKELEY NATIONAL LABORATORY

FACILITIES DIVISION

DRAWN BY	DATE
CHECKED BY	
APPROVED BY	
CAD FILE PATH	
SCALE NTS	
DRAWING NO. U116	SHEET
PROJECT NO.	

G:\Capital Projects\Procedures, Standards & Forms\Standards\CDDG\CDDG_Vol 3_Const_Dts\Part-I - Civil_Site\SiteUtilities\U116 INSULATION-FLANGE-INSUL-UNION-DETAIL.dwg