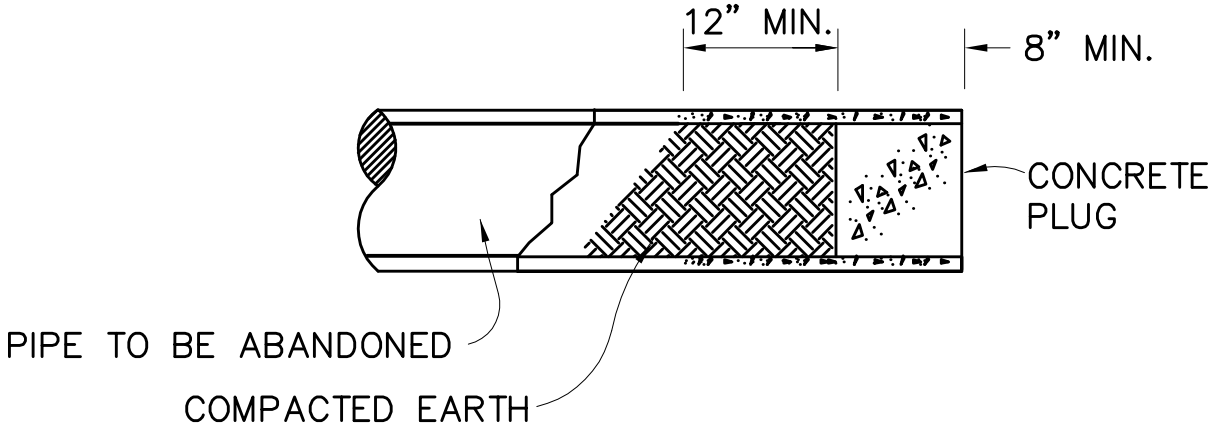

12" DIAMETER PIPE AND SMALLER

X
XX

ABANDONED PIPE PLUG DETAIL

SCALE: NONE

LBNL STANDARD DETAILS UNDERGROUND UTILTY ABANDONED PIPE PLUG DETAIL	DRAWN BY MCD	DATE 9/30/05
	CHECKED BY MCD	9/30/05
	APPROVED BY MCD	9/30/05
	CAD FILE PATH	
	SCALE NTS	
UNIVERSITY OF CALIFORNIA LAWRENCE BERKELEY NATIONAL LABORATORY FACILITIES DIVISION	DRAWING NO. U101	SHEET
	PROJECT NO.	

G:\Capital Projects\Procedures, Standards & Forms\Standards\CDDG\CDDG_Vol 3_Const_Dts\Part-I - Civil_Site\SiteUtilities\U101 UNDERGROUND UTILTY ABANDONED PIPE PLUG DETAIL.dwg