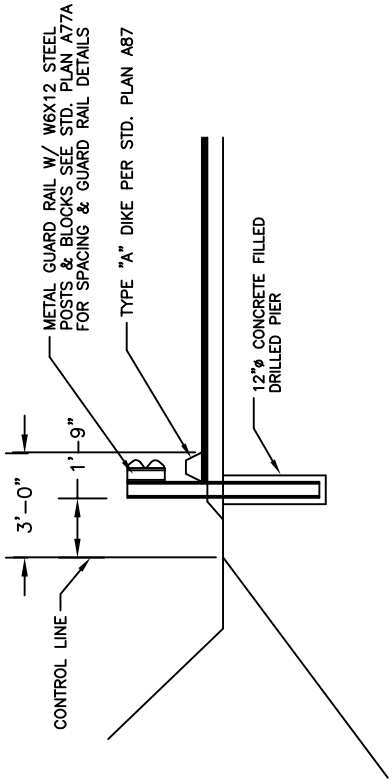

VEHICULAR PROTECTION BARRIER

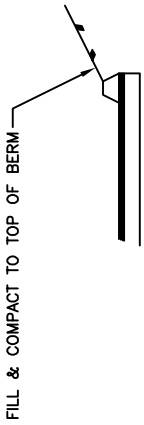

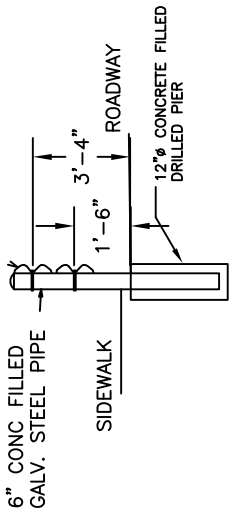

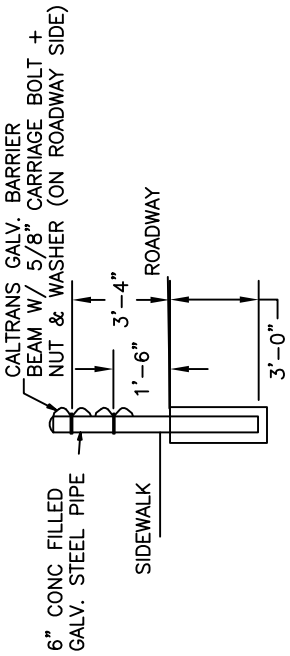

PEDESTRIAN PROTECTION BARRIER

LBNL CIVIL STANDARDS
PEDESTRIAN AND VEHICULAR PROTECTION BARRIER DETAILS

DRAWN BY	DATE
CHECKED BY	
APPROVED BY	
CAD FILE PATH	
SCALE NTS	
DRAWING NO. C109	SHEET
PROJECT NO.	

UNIVERSITY OF CALIFORNIA LAWRENCE BERKELEY NATIONAL LABORATORY

FACILITIES DIVISION

G:\Capital Projects\Procedures, Standards & Forms\Standards\CDDG\CDDG_Vol 3_Const_Dts\Part-I - Civil_Site\Civil\C109PEDESTRIAN AND VEHICULAR PROTECTION BARRIER DETAILS.dwg