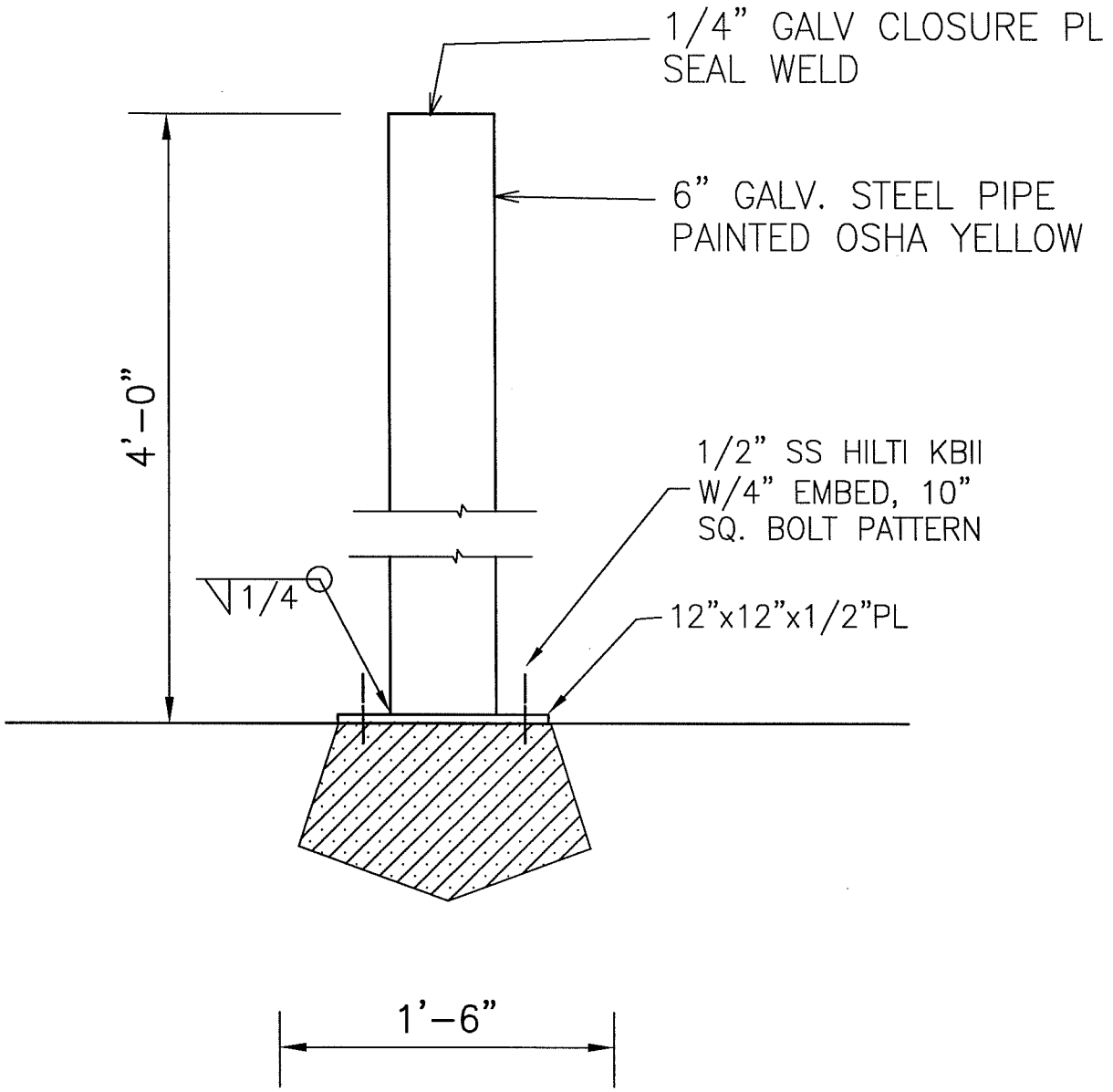

LBNL CIVIL STANDARDS BOLLARD SURFACE MOUNT	DRAWN BY	DATE
	CHECKED BY	
	APPROVED BY	
	CAD FILE PATH	
	SCALE NTS	
UNIVERSITY OF CALIFORNIA LAWRENCE BERKELEY NATIONAL LABORATORY FACILITIES DIVISION	DRAWING NO. C108	SHEET
	PROJECT NO.	

T:\groups\ELECT\Romy\Construction Std Details\Roadways & Traffic Cntrl\C108 bollard_surf_mount.dwg