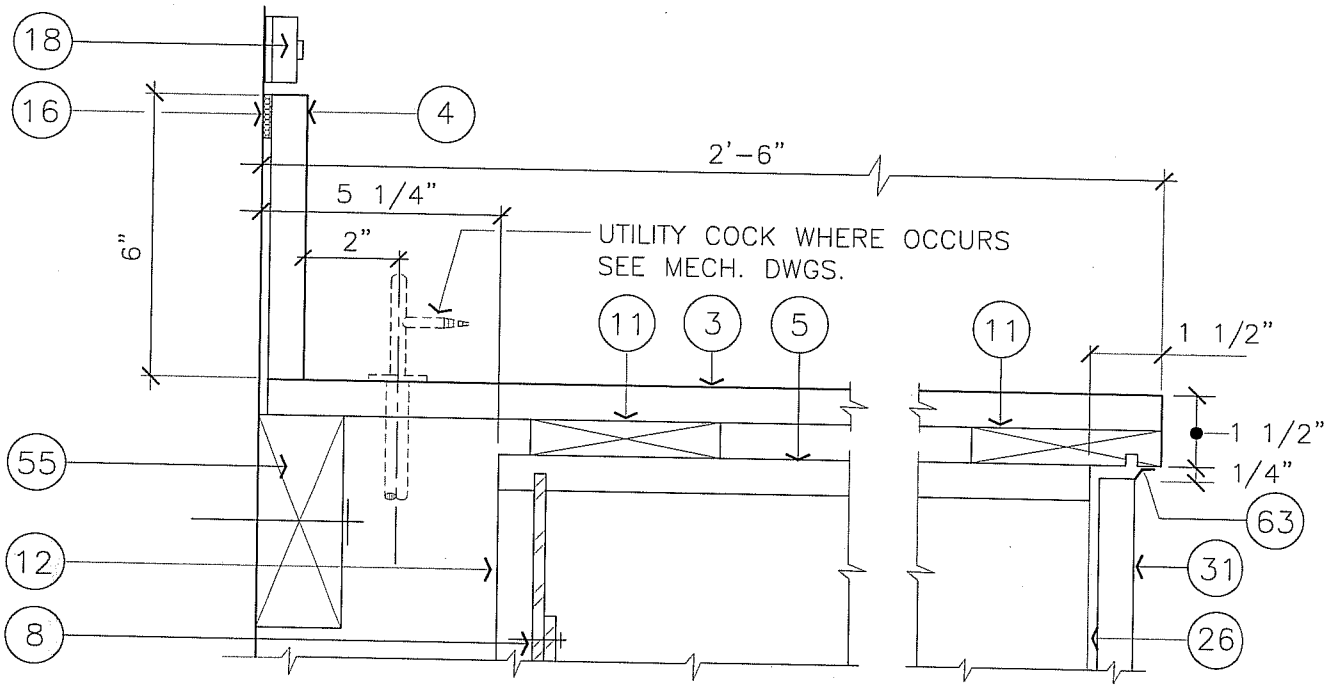

* SEE A771-1 FOR NOTES

CABINET COUNTER TOP W/SPLASH & CHASE

3" = 1'-0"

A778-2

ARCHITECTURAL STANDARD DETAIL CABINET COUNTER TOP W/SPLASH & CHASE	DRAWN BY W.C.	DETAIL TYPE CASEWORK
	DATE 7/2/98	SCALE 3"=1'-0"
	APPROVED BY	SHEET
UNIVERSITY OF CALIFORNIA – LAWRENCE BERKELEY NATIONAL LABORATORY FACILITIES DEPARTMENT	DATE	A778-2
	DRAWING FILE NAME A778-2	1