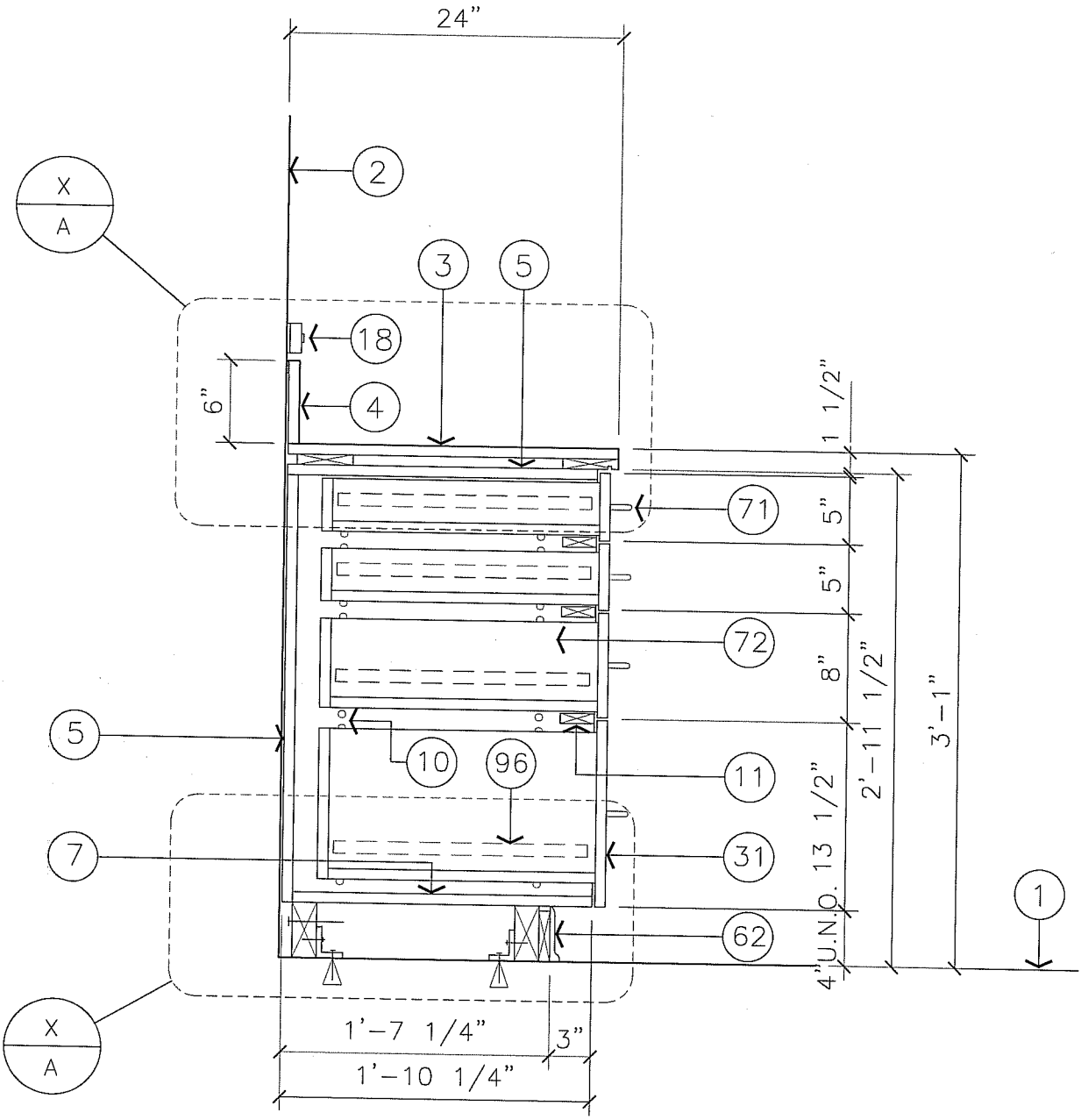

4 DRAWER BASE CAB. W/6"SPLASH-NO CHASE

1" = 1'-0"

* SEE A771-1 FOR NOTES

A773-6

ARCHITECTURAL STANDARD DETAIL 4 DRAWER BASE CAB. W/6"SPLASH - NO CHASE	DRAWN BY W.C.	DETAIL TYPE CASEWORK
	DATE 7/1/98	SCALE AS NOTED
	APPROVED BY	SHEET
UNIVERSITY OF CALIFORNIA - LAWRENCE BERKELEY NATIONAL LABORATORY FACILITIES DEPARTMENT	DATE	A773-6
	DRAWING FILE NAME A773-6	1