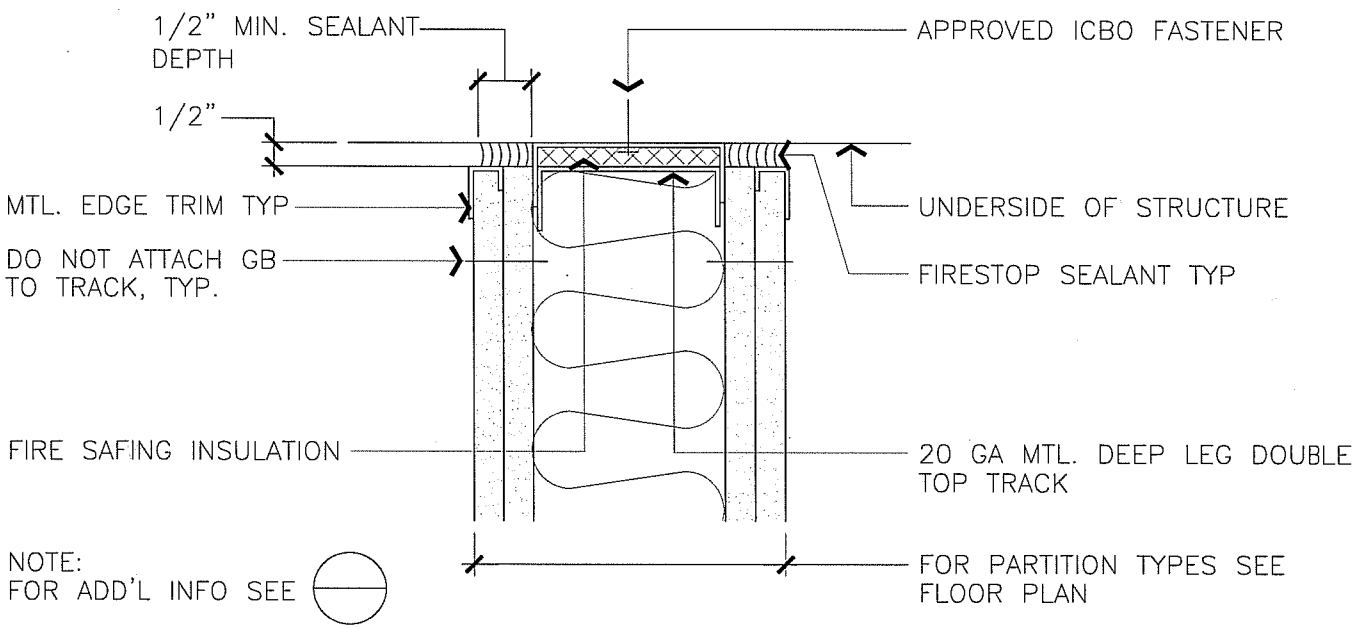

2-HR PARTITION @ HEAD

3" = 1'-0"

A711-3

ARCHITECTURAL STANDARD DETAILS 2-HR PARTITION @ HEAD	DRAWN BY STK	DETAIL TYPE PARTS
	DATE 8/8/98	SCALE 3"=1'-0"
	APPROVED BY	SHEET
UNIVERSITY OF CALIFORNIA – LAWRENCE BERKELEY NATIONAL LABORATORY FACILITIES DEPARTMENT	DATE	A711-3
	DRAWING FILE NAME A711-3	