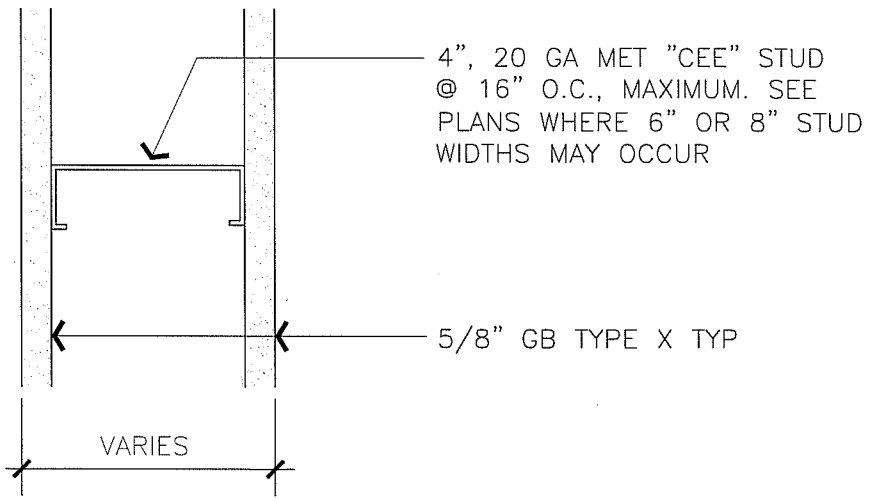

1-HR PARTITION

3" = 1'-0" STC 40-49 SIM UL DES U425 A710-2A

ARCHITECTURAL STANDARD DETAILS 1-HR PARTITION	DRAWN BY STK/WC	DETAIL TYPE PARTS
	DATE 4/1/99	SCALE 3"=1'-0"
	APPROVED BY	SHEET
UNIVERSITY OF CALIFORNIA – LAWRENCE BERKELEY NATIONAL LABORATORY FACILITIES DEPARTMENT	DATE	A710-2A
	DRAWING FILE NAME A710-2A	