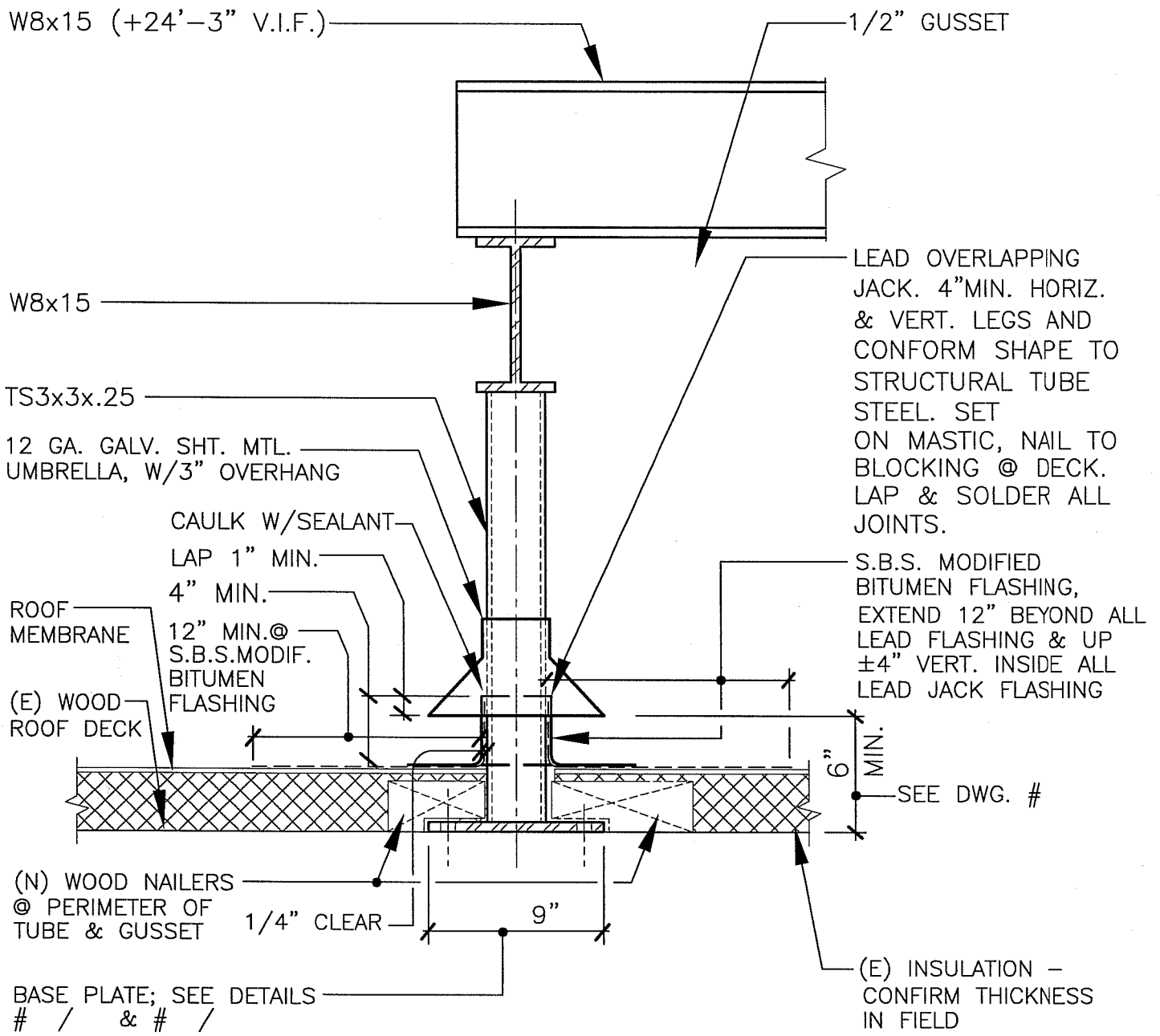

NOTE: THIS VIEW PER DETAIL # — TYPE "1" BASE PLATE . REFER TO DETAIL # FOR TYPE "2" BASE PLATE & GUSSET DIMENSIONING VARIATIONS.

ROOF FLASHING & EQUIP. PLATFORM BASE PLATE

SCALE : 1 1/2" = 1'-0" (WITHOUT GUSSETS) A506

ARCHITECTURAL STANDARD DETAIL **ROOF FLASHING & EQUIP. PLATFORM BASE PLATE**	DRAWN BY W.C.	DETAIL TYPE ROOF
	DATE 10/27/99	SCALE 1 1/2"=1'-0"
	APPROVED BY	SHEET
UNIVERSITY OF CALIFORNIA – LAWRENCE BERKELEY NATIONAL LABORATORY FACILITIES DEPARTMENT	DATE	A506
	DRAWING FILE NAME A506	1