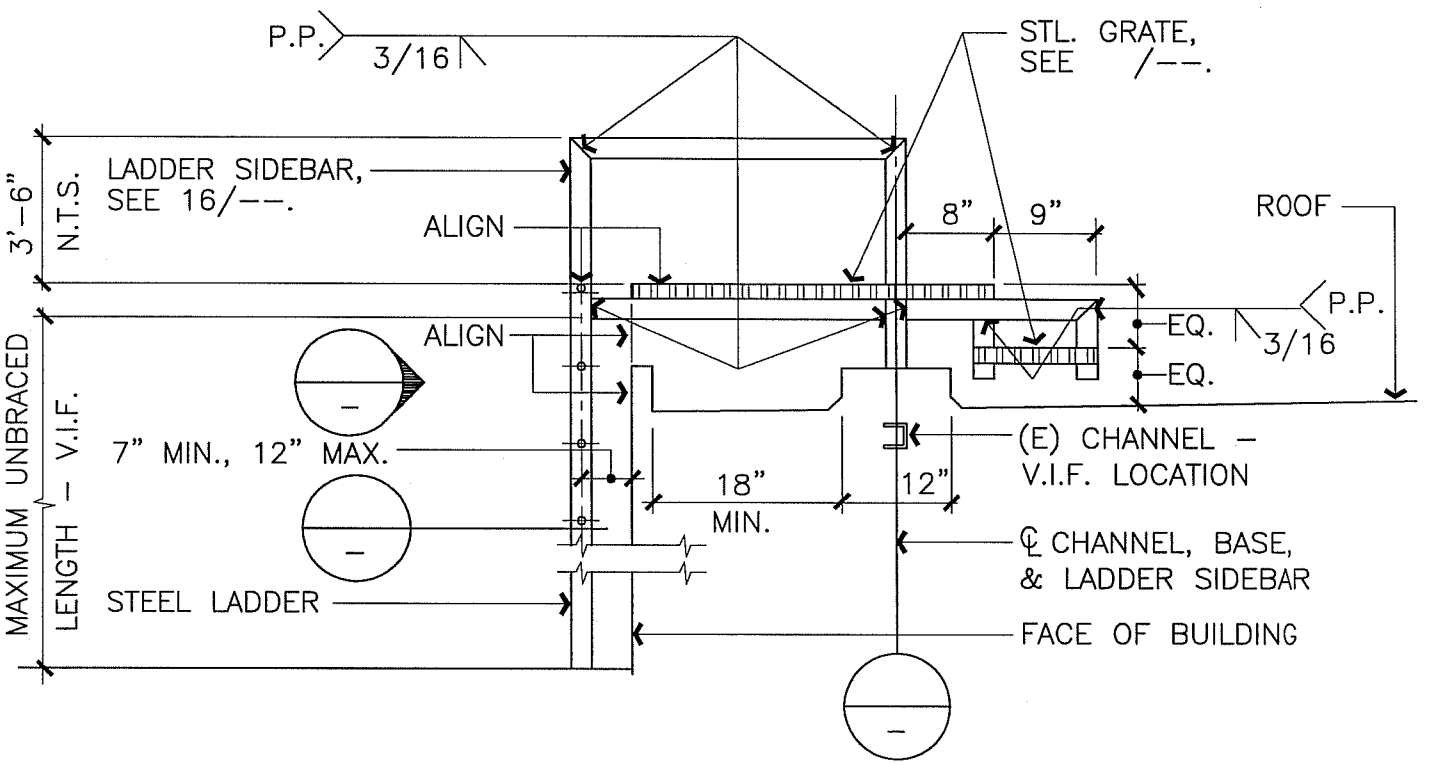

STEEL LADDER @ ROOF PARAPET- SECTION

SCALE : 3" = 1'-0"

A468

ARCHITECTURAL STANDARD DETAIL **STEEL LADDER @ ROOF PARAPET- SECTION**	DRAWN BY W.C.	DETAIL TYPE ROOF
	DATE 7/13/98	SCALE 3"=1'-0"
	APPROVED BY	SHEET
UNIVERSITY OF CALIFORNIA - LAWRENCE BERKELEY NATIONAL LABORATORY FACILITIES DEPARTMENT	DATE	A468
	DRAWING FILE NAME A468	1