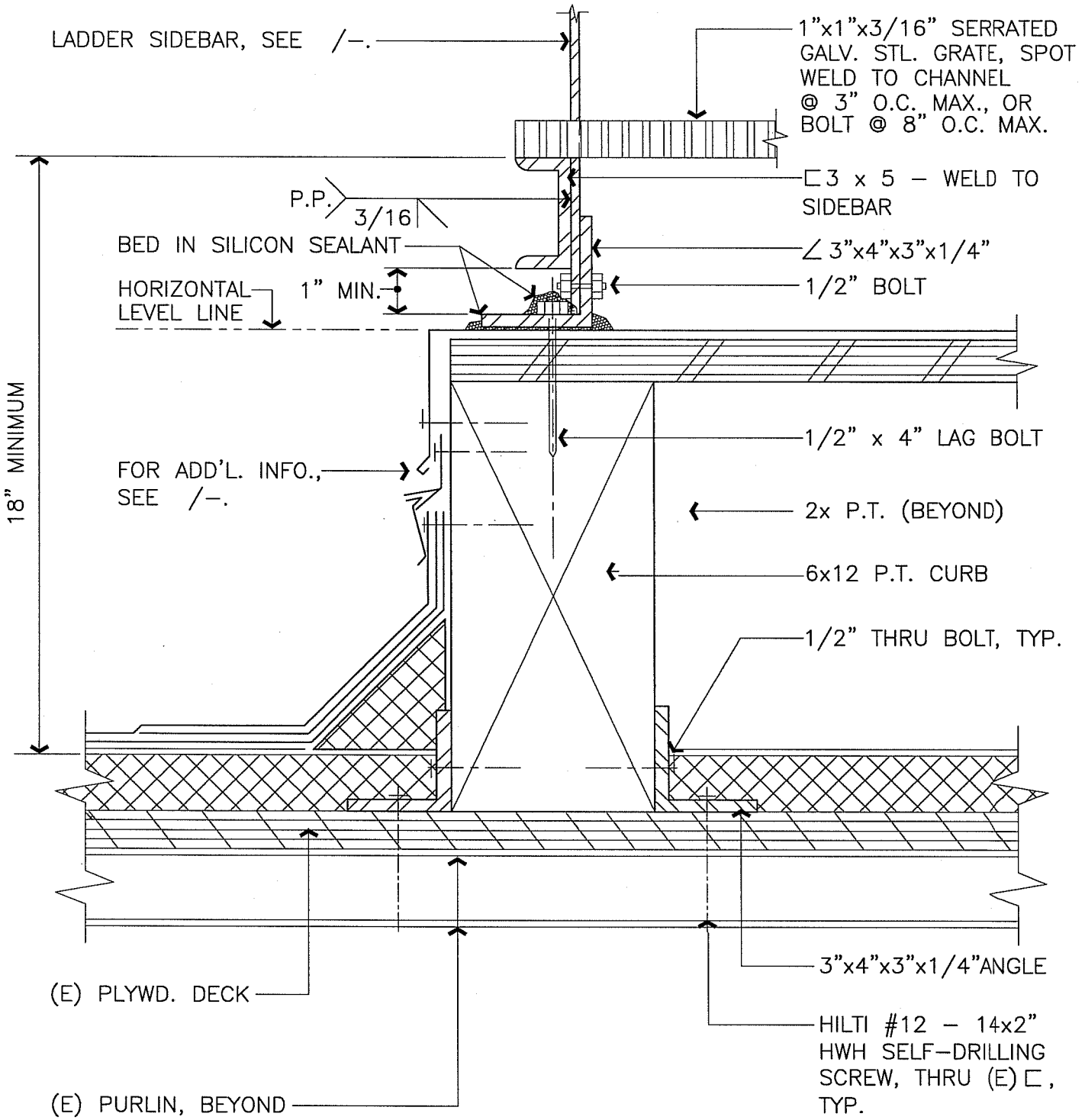

STEEL LADDER @ ROOF – BASE CURB

SCALE : 3" = 1'-0"

A467

ARCHITECTURAL STANDARD DETAIL **STEEL LADDER @ ROOF – BASE CURB**	DRAWN BY W.C.	DETAIL TYPE ROOF
	DATE 7/13/98	SCALE 3"=1'-0"
	APPROVED BY	SHEET
UNIVERSITY OF CALIFORNIA – LAWRENCE BERKELEY NATIONAL LABORATORY FACILITIES DEPARTMENT	DATE	A467
	DRAWING FILE NAME A467	1