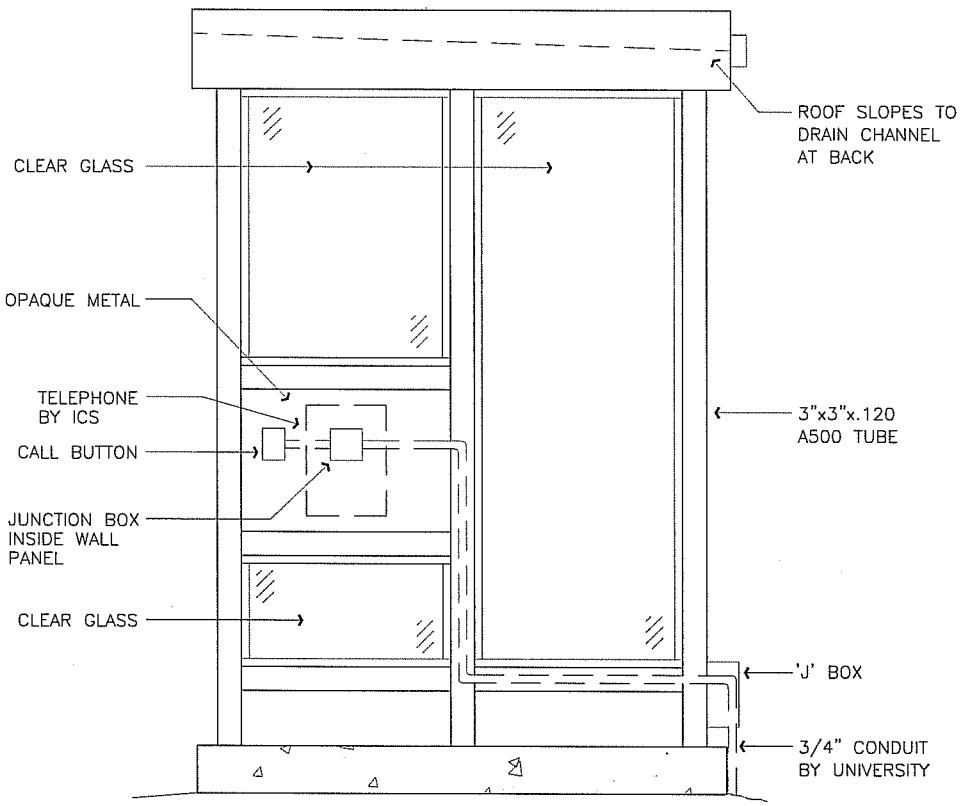

BUS SHELTER – RIGHT ELEVATION

SCALE : 1/2" = 1'–0"

A162

ARCHITECTURAL STANDARD DETAILS BUS SHELTER – RIGHT ELEVATION	DRAWN BY BL	DETAIL TYPE SITEWORK
	DATE 10/99	SCALE AS NOTED
	APPROVED BY	SHEET
UNIVERSITY OF CALIFORNIA – LAWRENCE BERKELEY NATIONAL LABORATORY FACILITIES DEPARTMENT	DATE	A–162
	DRAWING FILE NAME A–162	1