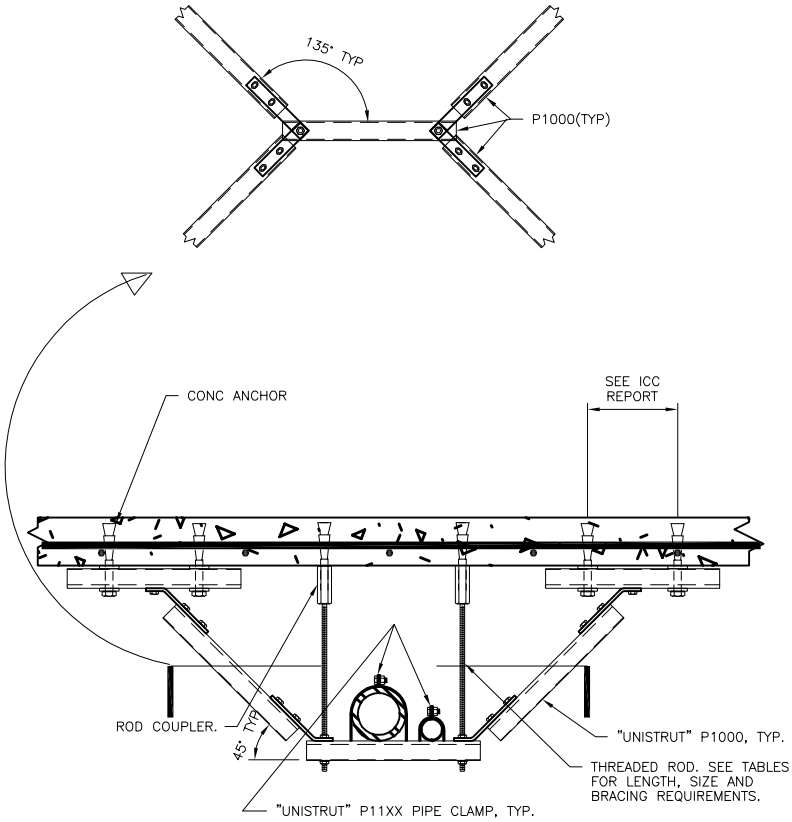


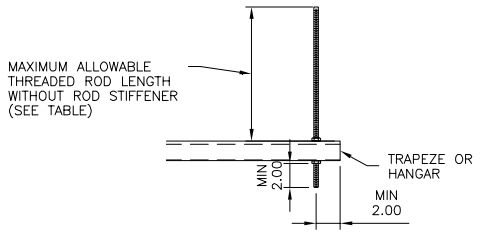


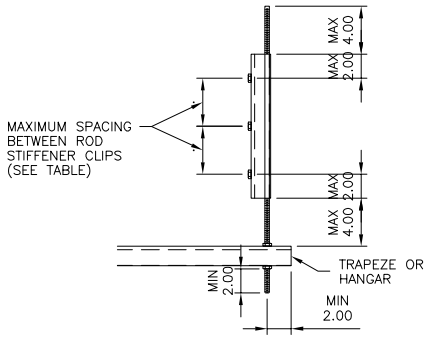


THREADED ROD WITHOUT STIFFENER

| Threaded Rod Size | Maximum Allowable Rod Length Without Stiffener |
|---|---|
| 3/8" –16 | 16" |
| 1/2" –13 | 22" |
| 5/8" –11 | 28" |
| 3/4" –10 | 34" |
| 7/8" – 9 | 40" |
| 1" – 8 | 46" |
| 1 1/8"– 7 | 52" |
| 1 1/4"– 7 | 55" |

THREADED ROD WITH STIFFENER

| Threaded Rod Size | Maximum Spacing Between Rod Stiffener Clips |
|---|---|
| 3/8" –16 | 13" |
| 1/2" –13 | 18" |
| 5/8" –11 | 23" |
| 3/4" –10 | 28" |
| 7/8" – 9 | 33" |
| 1" – 8 | 38" |
| 1 1/8"– 7 | 43" |
| 1 1/4"– 7 | 48" |

1

# TRAPEEZE & HANGER ROD DETAILS

NTS

LBNL CIVIL STANDARDS

TRAPEEZE & HANGER DETAILS

| | |
|---|---|
| DRAWN BY FTA | DATE 08/11/2010 |
| CHECKED BY | |
| APPROVED BY | |
| CAD FILE PATH | |
| SCALE NTS | |
| DRAWING NO. S110 | SHEET S1 |
| PROJECT NO. | 1 OF 1 |

UNIVERSITY OF CALIFORNIA LAWRENCE BERKELEY NATIONAL LABORATORY

FACILITIES DIVISION