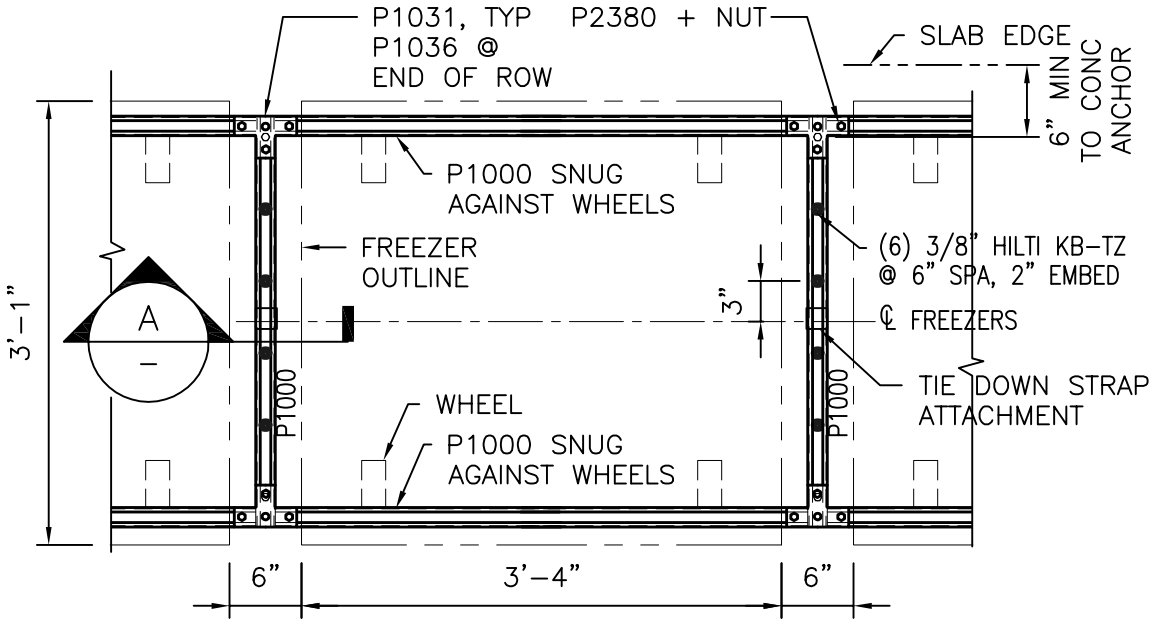

PLAN
SCALE 3/4"=1'-0"

DESIGN VALID FOR ANY FLOOR OF A 4 STORY BUILDING WITH 3-1/4" LWC FILL ON METAL DECK

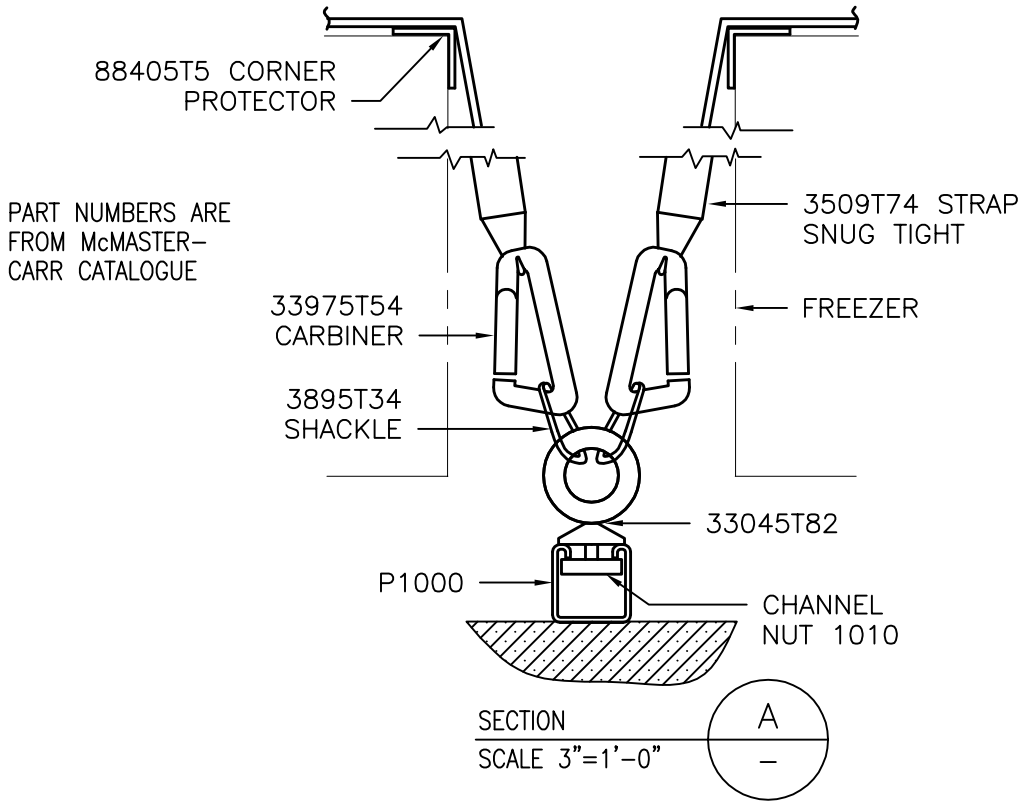

SECTION A
SCALE 3"=1'-0"

LBNL CIVIL STANDARDS
-80 FREEZER ANCHORAGE
PLAN & SECTION

DRAWN BY	DATE
CHECKED BY	
APPROVED BY	
CAD FILE PATH	
SCALE AS NOTED	
DRAWING NO. S109A	SHEET 1 OF 1
PROJECT NO.	

UNIVERSITY OF CALIFORNIA LAWRENCE BERKELEY NATIONAL LABORATORY

FACILITIES DIVISION