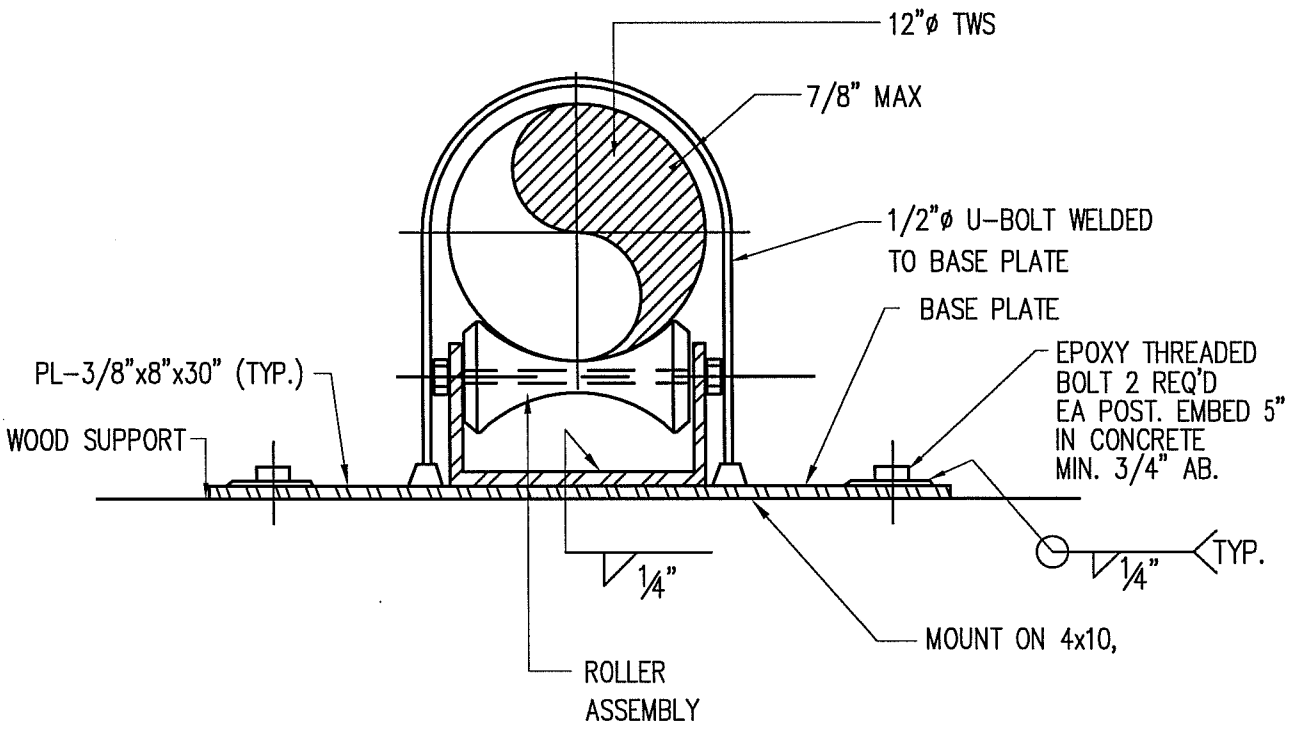

X/XX **TYPICAL ROOF PIPE SUPPORT DETAIL**

SCALE: NONE

LBNL STANDARD TYPICAL ROOF PIPE SUPPORT DETAIL	DRAWN BY	DATE
	CHECKED BY	
	APPROVED BY	
	CAD FILE PATH	
	SCALE NTS	
UNIVERSITY OF CALIFORNIA LAWRENCE BERKELEY NATIONAL LABORATORY FACILITIES DIVISION	DRAWING NO. P111	SHEET
	PROJECT NO.	

T:\groups\ELECT\Romy\Mech_IHEM\Piping\P111 ROOF-PIPE-SUPP.dwg