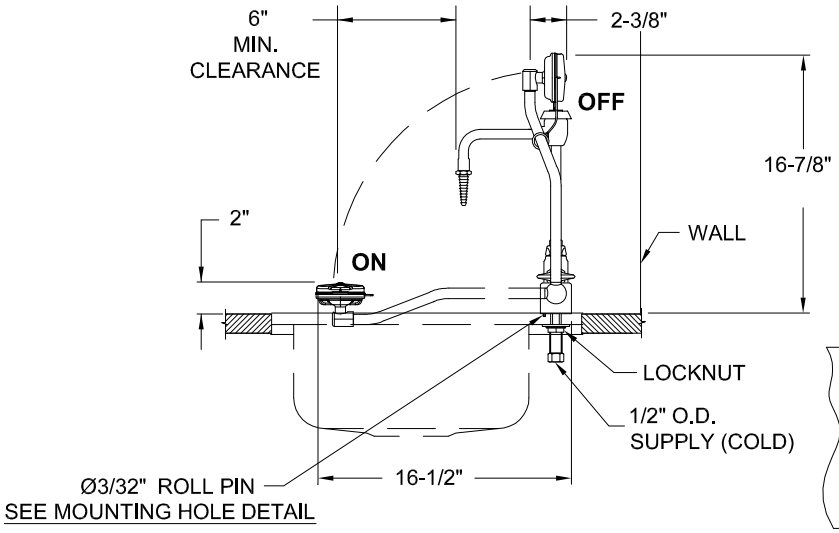

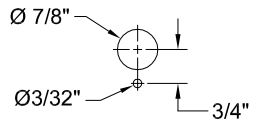

FRONT OF SINK

2 3 **MOUNTING HOLE DETAIL**

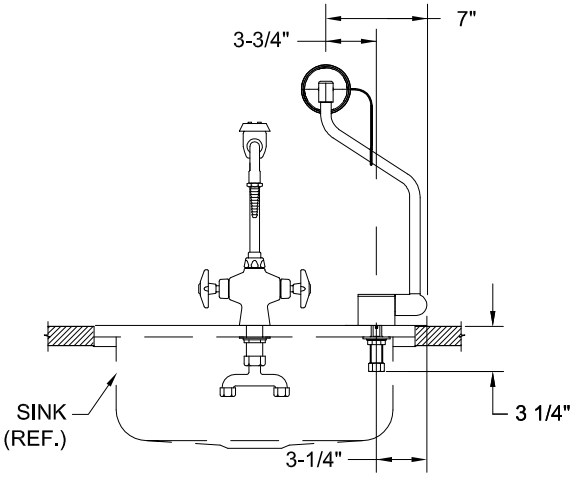

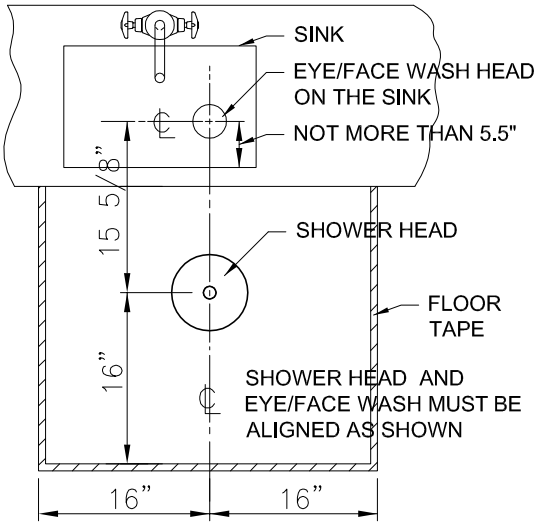

SINK-MOUNT EYE/FACE WASH

WITH OVER HEAD SHOWER 6

NOTES:

1. THE ANSI Z358.1-2009 STANDARD SPECIFIES EYEWASH NOZZLE HEIGHTS TO BE 33 IN. TO 45 IN. ABOVE THE FLOOR AND 6 IN. MINIMUM FROM WALL OR NEAREST OBSTRUCTION.

2. INSTALL SO THAT EYEWASH HEAD IS OVER SINK WHEN ACTIVATED. EYEWASH REQUIRES 4-1/2" OF CLEARANCE AROUND HEAD FOR FACEWASH STREAMS.

3. DRILL ONE Ø7/8" HOLE AND ONE Ø3/32" HOLE WHERE UNIT IS TO BE INSTALLED. REFER TO MOUNTING HOLE DETAIL. GO TO P102C OR THE LATEST REVISION FOR SHOWER DETAIL REFERENCE.

4. THESE DIMENSIONS MAY VARY ±1/2".

5. ALL SUBSTITUTE MUST BE APPROVED BY LBNL PROJECT MANAGER & EH&S.

6. SEE P102C OR THE LATEST REVISION FOR SHOWER DETAIL AND ELECTRICAL REQUIREMENT.

SINGLE ACTION PULL DOWN MODEL 7610
EMERGENCY EYE/FACEWASH & SHOWER INSTALLATION DETAIL

X
XX

SCALE: NONE

LBNL STANDARD

EMERGENCY EYE/FACEWASH & SHOWER INSTALLATION DETAIL

SINGLE ACTION PULL DOWN MODEL 7610

DRAWN BY RZT	DATE 12/22/2011	
CHECKED BY MCD	12/22/2011	
APPROVED BY MCD	12/22/2011	
CAD FILE PATH		
SCALE NTS		
DRAWING NO. P110A		SHEET
PROJECT NO.		

UNIVERSITY OF CALIFORNIA LAWRENCE BERKELEY NATIONAL LABORATORY

FACILITIES DIVISION