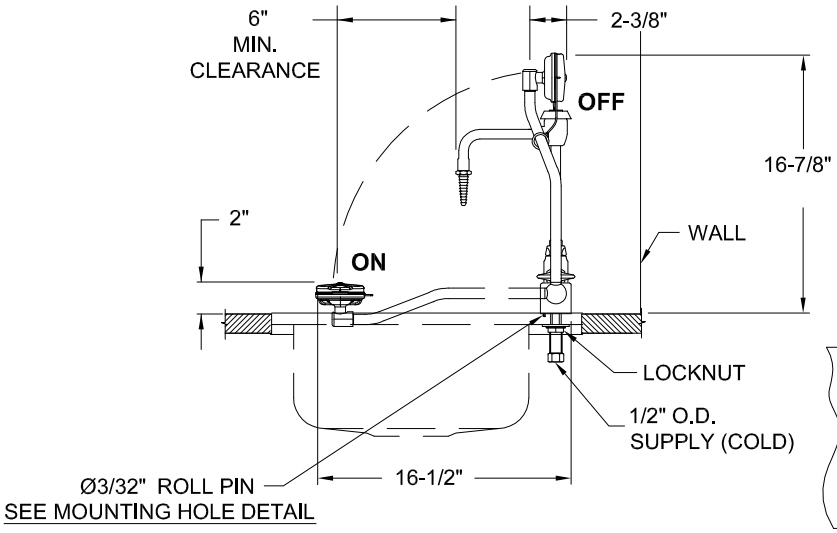

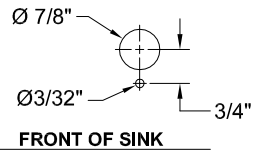

2 3 **MOUNTING HOLE DETAIL**

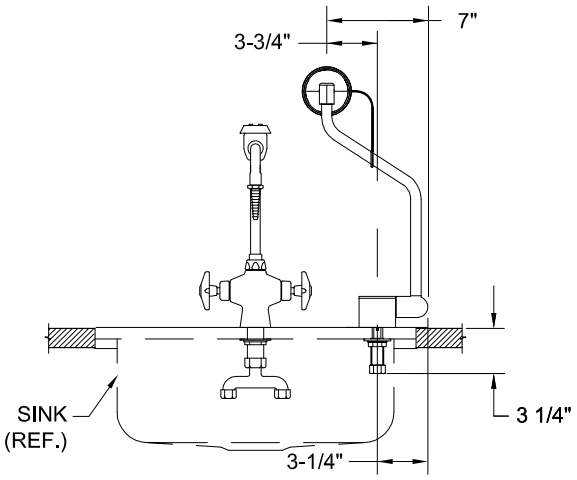

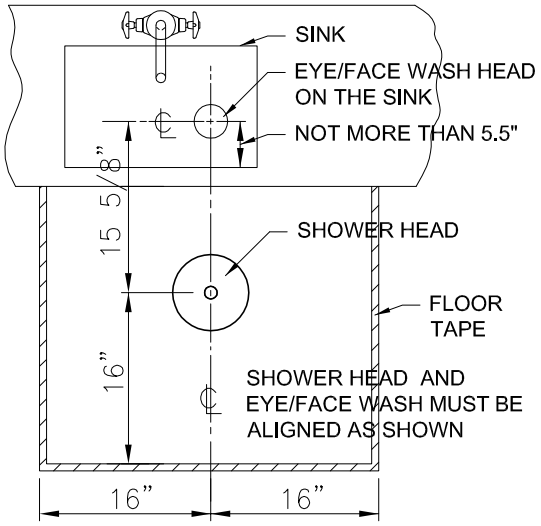

SINK-MOUNT EYE/FACE WASH
WITH OVER HEAD SHOWER 6

NOTES:

1. THE ANSI Z358.1-2009 STANDARD SPECIFIES EYEWASH NOZZLE HEIGHTS TO BE 33 IN. TO 45 IN. ABOVE THE FLOOR AND 6 IN. MINIMUM FROM WALL OR NEAREST OBSTRUCTION.

2. INSTALL SO THAT EYEWASH HEAD IS OVER SINK WHEN ACTIVATED. EYEWASH REQUIRES 4-1/2" OF CLEARANCE AROUND HEAD FOR FACEWASH STREAMS.

3. DRILL ONE Ø7/8" HOLE AND ONE Ø3/32" HOLE WHERE UNIT IS TO BE INSTALLED. REFER TO MOUNTING HOLE DETAIL. GO TO P102C OR THE LATEST REVISION FOR SHOWER DETAIL REFERENCE.

4 THESE DIMENSIONS MAY VARY ±1/2".

5. A HAWS MODEL 7610 PULL DOWN EYE/FACE WASH AND OVERHEAD SHOWER MODEL 8122 SHALL BE USED. SHOWER HEAD MUST BE SP829 WITH INTEGRADED 20 GPM FLOW CONTROL. ALL SUBSTITUTE MUST BE APPROVED BY LBNL PROJECT MANAGER & EH&S.

6. SEE P102C OR THE LATEST REVISION FOR SHOWER DETAIL AND ELECTRICAL REQUIREMENT.

EMERGENCY SINK-MOUNTED EYE/FACE WASH & OVERHEAD SHOWER PULL DOWN MODEL 7610 AND SHOWER MODEL 8122

X
XX

SCALE: NONE

LBNL STANDARD

EMERGENCY SINK-MOUNTED EYE/FACE WASH & OVERHEAD SHOWER

EEWS INSTALLATION DETAIL

DRAWN BY RZT	DATE 12/22/2011	
CHECKED BY MCD	12/22/2011	
APPROVED BY MCD	12/22/2011	
CAD FILE PATH		
SCALE NTS		
DRAWING NO. P110A	SHEET	
PROJECT NO.		

UNIVERSITY OF CALIFORNIA LAWRENCE BERKELEY NATIONAL LABORATORY

FACILITIES DIVISION

G:\Capital Projects\Procedures, Standards & Forms\Standards\CDDG\CDDG_Vol 3_Const_Dts\Part-V - Mechanical Details\Piping\P110A EMERGENCY EYEFACE & SHOWER.dwg