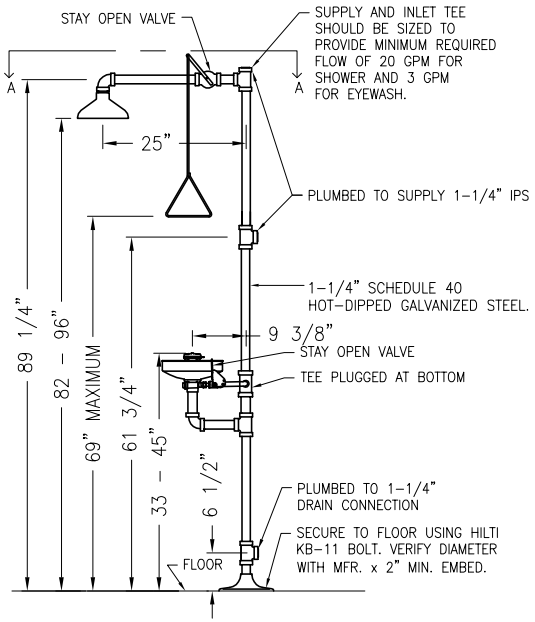

EEWS INSTALLATION DETAIL

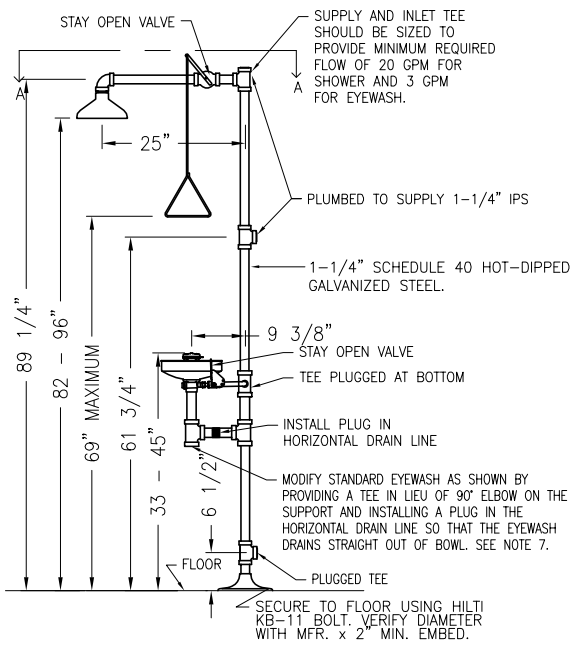

EEWS INSTALLATION DETAIL (ALT-1)

NTS

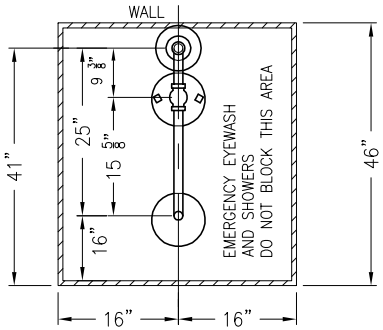

VIEW A-A

MIN. CLEARANCES OF EEWS FROM ENERGIZED ELECTRICAL CIRCUITS.

CONDITION	ACTION
EEWS* ON SAME HORIZONTAL PLANE & ≥4 ft. FROM PANEL, WALL & SWITCH, DISCONNECT OR OUTLET	NO ACTION REQUIRED
EEWS ON SAME HORIZONTAL PLANE & ≥3ft. & <4ft. FROM PANEL, WALL SWITCH, DISCONNECT OR OUTLET	SHIELD PANELS & DISCONNECT WITH PLEXIGLAS (11" WIDE & LONG ENOUGH TO EXTEND 4" PAST PANEL/DISCONNECT TOP & BOTTOM AT SIDE AND ACROSS TOP). 2 GFCI PROTECT OUTLETS. INSTALL "CARLON" WEATHER PROOF COVERS ON SWITCHES & OUTLETS
EEWS<3ft FROM WALL SWITCH OR OUTLET (CAN BE ON SAME HORIZONTAL PLANE OR IN FRONT OF SWITCH OR OUTLET.	GFCI PROTECT OUTLETS. INSTALL "CARLON" WEATHER PROOF COVERS ON SWITCHES & RECEPTACLES.
EEWS ON SAME HORIZONTAL PLANE &<3ft FROM PANEL OR DISCONNECT	NO GUARDING/SHIELDING PERMITTED. EITHER MOVE EWSS OR ELECTRICAL COMPONENT.
EEWS IN FRONT OF & ≥36" FROM 120/208 V PANEL OR DISCONNECT	NO ACTION REQUIRED
EEWS IN FRONT OF & <36" FROM 120/208 V PANEL OR DISCONNECT	NO GUARDING/SHIELDING PERMITTED. EITHER MOVE EEWS OR ELECTRICAL COMPONENT.
EEWS IN FRONT OF & ≥42" FROM 480 V PANEL OR DISCONNECT	NO ACTION REQUIRED
EEWS IN FRONT OF & <42" FROM 480 V PANEL OR DISCONNECT	NO GUARDING/SHIELDING PERMITTED. EITHER MOVE EEWS OR ELECTRICAL COMPONENT.

* EEWS: EMERGENCY EYE/FACEWASH & SAFETY SHOW
** ONLY QUALIFIED ELECTRICIANS SHALL INSTALL GFCIs

NOTES:

1. A HAWS MODEL 8300-8309 COMBINATION EYE/FACE WASH SAFETY SHOWER SHALL BE USED. SHOWER HEAD MUST BE SP829 WITH INTEGRATED 20 GPM FLOW CONTROL.
2. LOCATE AWAY FROM EQUIPMENT & OBSTRUCTIONS TO MAINTAIN THE INDICATED CLEARANCES.
3. DEMARCATE CLEARANCE AREA WITH GREEN AND WHITE COLORS.
4. PROVIDE SUFFICIENT SPACE UNDERNEATH EYEWASH FOR DRAIN BUCKET.
5. PROVIDE ELECTRICAL CLEARANCES PER LBNL POLICY FOR EMERGENCY EYEWASHES AND SAFETY SHOWERS.
6. DIMENSIONS SHOWN ARE INTENDED TO REFLECT UNITS AS SUPPLIED BY MANUFACTURER. IF DIMENSIONS VARY MORE THAN ±1/2" CONTACT PROJECT ARCHITECT.
7. EEWS INSTALLATIONS SHALL COMPLY WITH THE "EEWS INSTALLATION DETAIL" ABOVE. INSTALLATIONS PER ALT.1 SHALL ONLY BE PERMITTED BY CASE-SPECIFIC CONCURRENCE BY EH&S.
8. INSTALL A "DO NOT CLOSE VALVE" TAG AT THE SUPPLY VALVE. TAG SHOULD BE PART NO. RPT-32 MANUFACTURED BY HCL INC., 510 E. MAUDE AVE., SUNNYVALE CA 94086.
9. ASSIGN AN EQUIPMENT ID NO. TO THE NEWLY INSTALLED UNIT & AFFIX AN EQUIPMENT ID ON THE WALL ADJACENT TO THE UNIT.
10. USE DOMESTIC WATER SUPPLY TO BE 30+/- 0.5 PSI. SHOWER FLOW RATE TO BE AT LEAST 20 GPM. EYE/FACE WASH FLOW RATE TO BE AT LEAST 3.0 GPM
11. HAWS INSTALLATION RECOMMENDATION; "DO NOT USE REGULAR PIPE SEALANT. IF NECESSARY USE DOW CORNING 832 SEALANT PLACING 5 SMALL BEADS ON THE MALE TREADS, JUST ABOVE THE FIRST THREAD."

LBNL STANDARDS
EMERGENCY EYE/FACEWASH AND SHOWER STATION
EEWS INSTALLATION DETAIL

UNIVERSITY OF CALIFORNIA LAWRENCE BERKELEY NATIONAL LABORATORY
FACILITIES DIVISION

DRAWN BY	
CHECKED BY	MCD
APPROVED BY	MCD
CAD FILE PATH	
SCALE	NTS
DRAWING NO.	P102C
PROJECT NO.	
SHEET	
DATE	12/22/2011
	12/22/2011

G:\Capital Projects\Procedures, Standards & Forms\Standards\CDDG\CDDG_Vol 3_Const_Dts\Part-V - Mechanical Details\Piping\P102C EMERGENCY EYEFACE WASH AND SHOWER.dwg