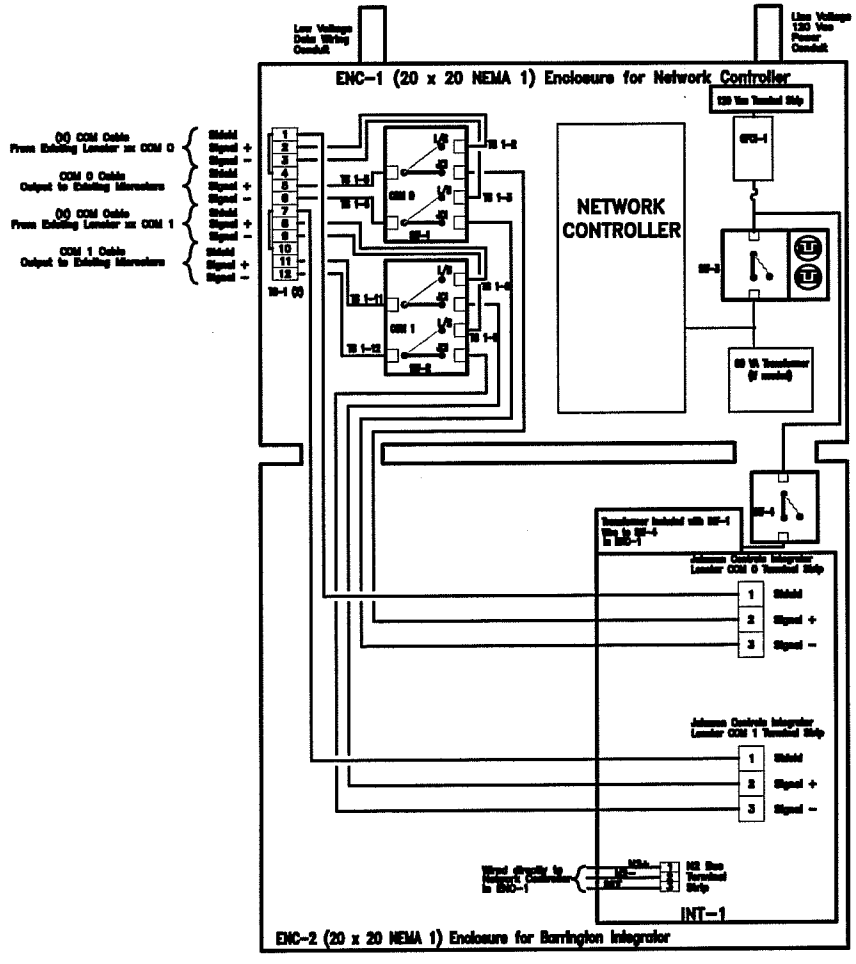

FPU-XXX-XXX

Bill of Materials

Item	Qty	Code No.	Description	Manufacturer
ENC -1,2	2	A-20X20X4LP	Enclosure, Nema 1, 20" x 20" x 6.6"	Hoffman
	2	A-20X20MP	Backplate, 17" x 14.5"	Hoffman
SW-1,2	2	23F287	Toggle Switch, SPDT	Nais
TB-1,2	12	M-4/8	Terminal Block (12 Connection)	Entrelec
SW-3	1	PRX-F8	Fuse Receptacle/Switch Assembly	Nais
SW-4	1	FOX	SPST Switch	Nais
INT-1	1	MS-CMSM-0	JCI Metasys to Barrington Lonaire Integrator	Johnson Controls
GFCI-1	1	GFCI200	Ground Fault Circuit Interrupt	Hubbell

Sequence of Operation

The existing Barrington Lonaires control various Microstars in Building XXX. Lonaire COM 0 and COM 1 will be routed through the Metasys enclosure ENC-1. Switches SW-1 and SW-2 located in ENC-1 will act as routing switches. In the I/S position, the existing Lonaire will control the existing Microstars. In the JCI position the Metasys network controller will control the Microstars via Contacore Barrington Integrator INT-1, located in enclosure ENC-2.

SHEET NOTES
Power wiring will be routed down the right side of the panel.
Data wiring will be routed down the left side of the panel.
Enclosure doors will be hinged.
ENC-1 component placement shall allow space for mounting of MI-MCM200-0 or MS-MAM6510-0 with 24 VAC transformer. (provided separately).
Holes will be drilled and keyed to accomodate either controller and transformer in the spaces indicated.
SW-3 shall be provided with a hole and grommet to accomodate entry of NCM/MAC cord.

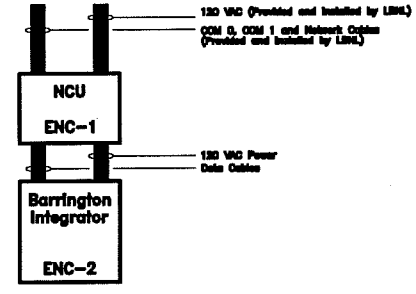

Conduit, Cabling, and Wiring Routing

LBN STANDARDS
NC/BA INSTALLATION

UNIVERSITY OF CALIFORNIA LAWRENCE BERKELEY NATIONAL LABORATORY

FACILITIES DIVISION

DRAWN BY		DATE
CHECKED BY		
APPROVED BY		
CAD FILE PATH		
SCALE	NTS	
DRAWING NO.	J102	SHEET
PROJECT NO.		

T:\groups\ELECT\Romy\Mech_IHEM\Controls\J102 NCM-Integrator Installation Template.dwg