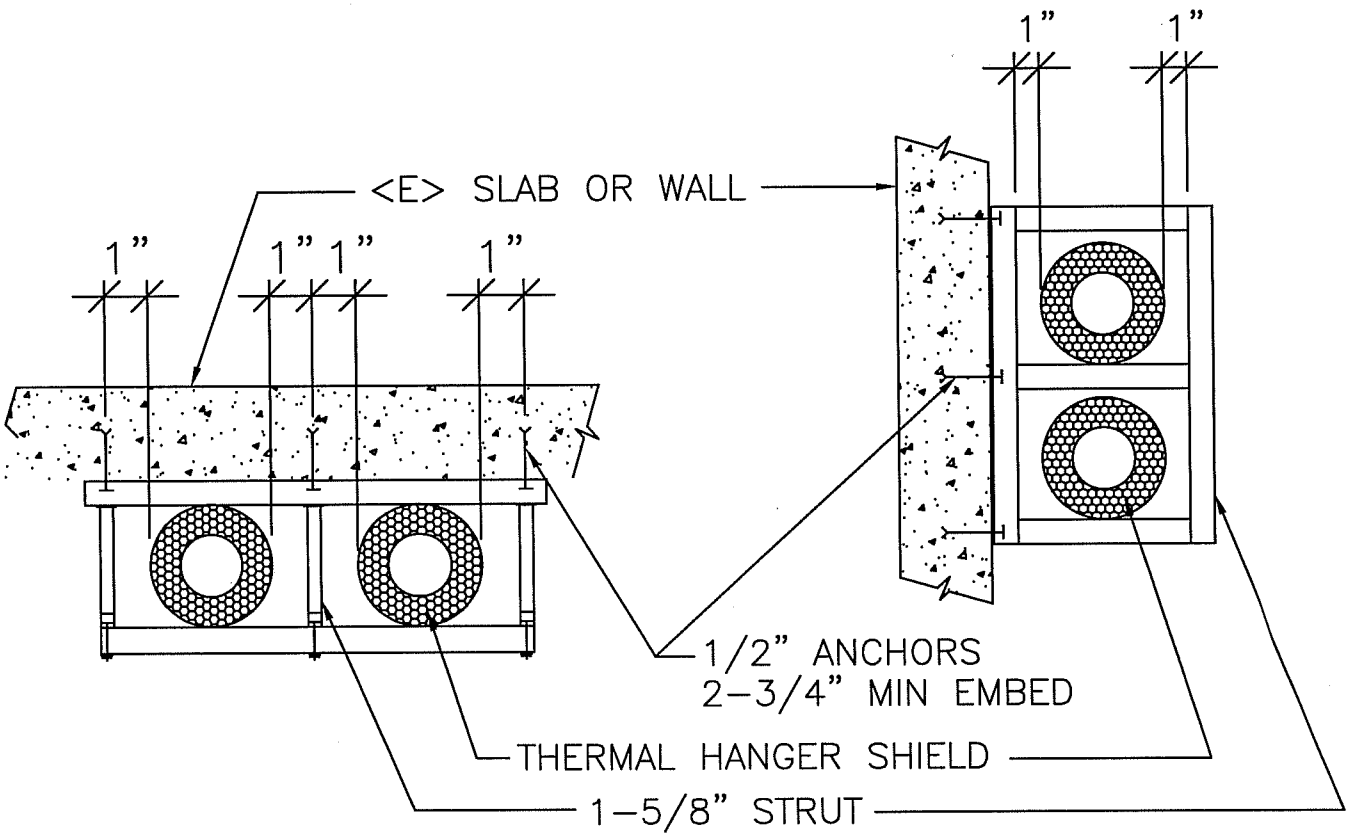

X
XX

PIPE SUPPORT-EXPANSION TYPE/WALL MOUNT

SCALE: NONE

LBNL STANDARD PIPE SUPPORT-EXPANSION TYPE/WALL MOUNT	DRAWN BY	DATE
	CHECKED BY	
	APPROVED BY	
	CAD FILE PATH	
	SCALE NTS	
UNIVERSITY OF CALIFORNIA LAWRENCE BERKELEY NATIONAL LABORATORY FACILITIES DIVISION	DRAWING NO. H155	SHEET
	PROJECT NO.	

T:\groups\ELECT\Romy\Mech_IHEM\HVAC_Details\H155 PIPE-SUPP-5.dwg