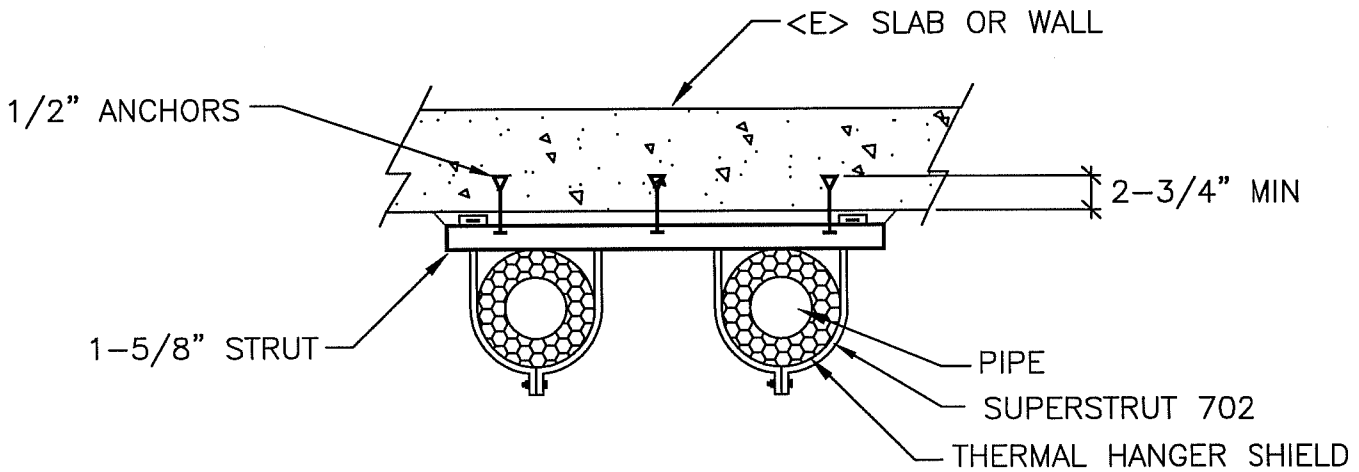

X
XX

PIPE SUPPORT

SCALE: NONE

LBNL STANDARD PIPE SUPPORT	DRAWN BY	DATE
	CHECKED BY	
	APPROVED BY	
	CAD FILE PATH	
	SCALE NTS	
UNIVERSITY OF CALIFORNIA LAWRENCE BERKELEY NATIONAL LABORATORY FACILITIES DIVISION	DRAWING NO. H154	SHEET
	PROJECT NO.	

T:\groups\ELECT\Romy\Mech_IHEM\HVAC_Details\H154 PIPE-SUPP-4.dwg