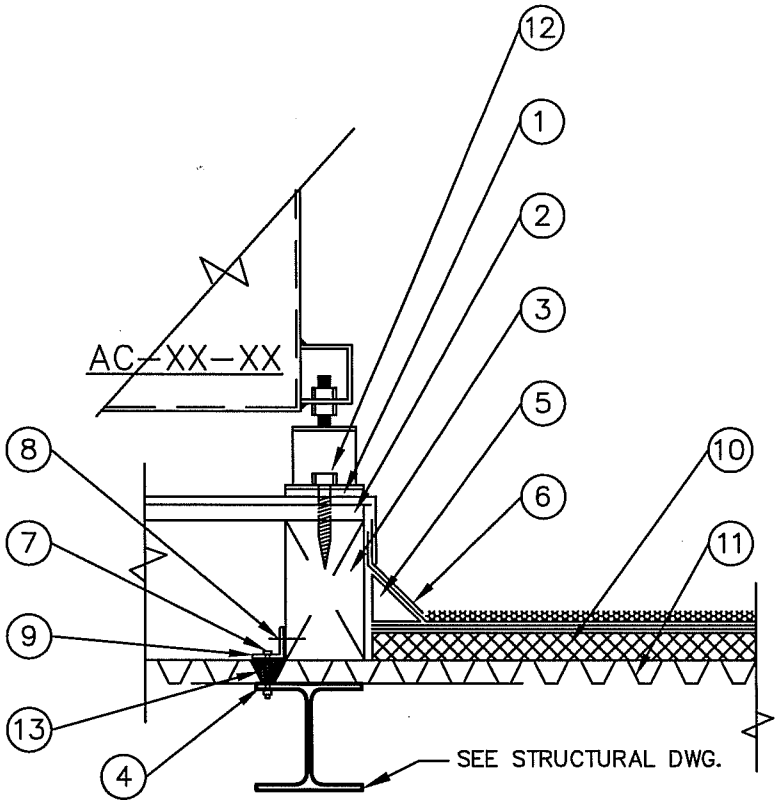

1. 20 GA. GALV. SHEET COVER SOLDERED.
2. SEE STRUCTURAL DWG.
3. 6x8 FRAME
4. "PENDER" TYPE WASHER.
5. 2x2 WOOD CANT.
6. SEE STRUCTURAL DWG.
7. SEE STRUCTURAL DWG.
8. SEE STRUCTURAL DWG.
9. SEE STRUCTURAL DWG.
10. EXISTING ROOF INSULATION TO REMAIN.
11. EXISTING ROOF DECK TO REMAIN.
12. SEE STRUCTURAL DWG.
13. WOOD FILLER, CUT TO FIT AS REQUIRED.

X
XX

ROOF CURB DETAIL

SCALE: NONE

LBNL STANDARD
ROOF CURB DETAIL

DRAWN BY	DATE
CHECKED BY	
APPROVED BY	
CAD FILE PATH	
SCALE NTS	

UNIVERSITY OF CALIFORNIA LAWRENCE BERKELEY NATIONAL LABORATORY
FACILITIES DIVISION

DRAWING NO. H141
SHEET
PROJECT NO.

T:\groups\ELECT\Romy\Mech_IHEM\HVAC_Details\H141 ROOF-CURB-DETAIL.dwg