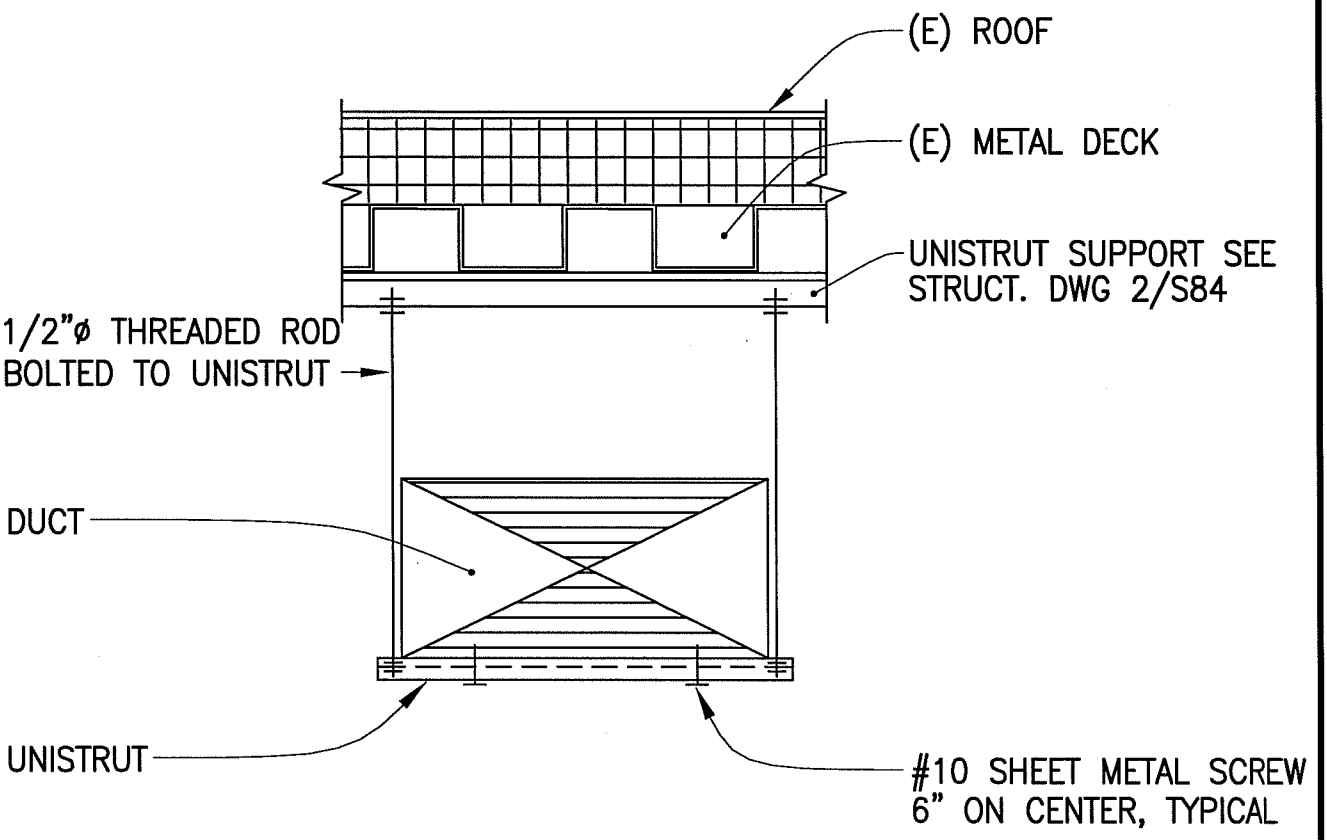

X
XX

RECTANGULAR DUCT SUPPORT

SCALE: NONE

LBNL STANDARD
RECTANGULAR DUCT SUPPORT

DRAWN BY	DATE
CHECKED BY	
APPROVED BY	
CAD FILE PATH	
SCALE NTS	

UNIVERSITY OF CALIFORNIA LAWRENCE BERKELEY NATIONAL LABORATORY
FACILITIES DIVISION

DRAWING NO. H139
SHEET
PROJECT NO.

T:\groups\ELECT\Romy\Mech_IHEM\HVAC_Details\H139 RECTANG-DUCT-SUPP.dwg