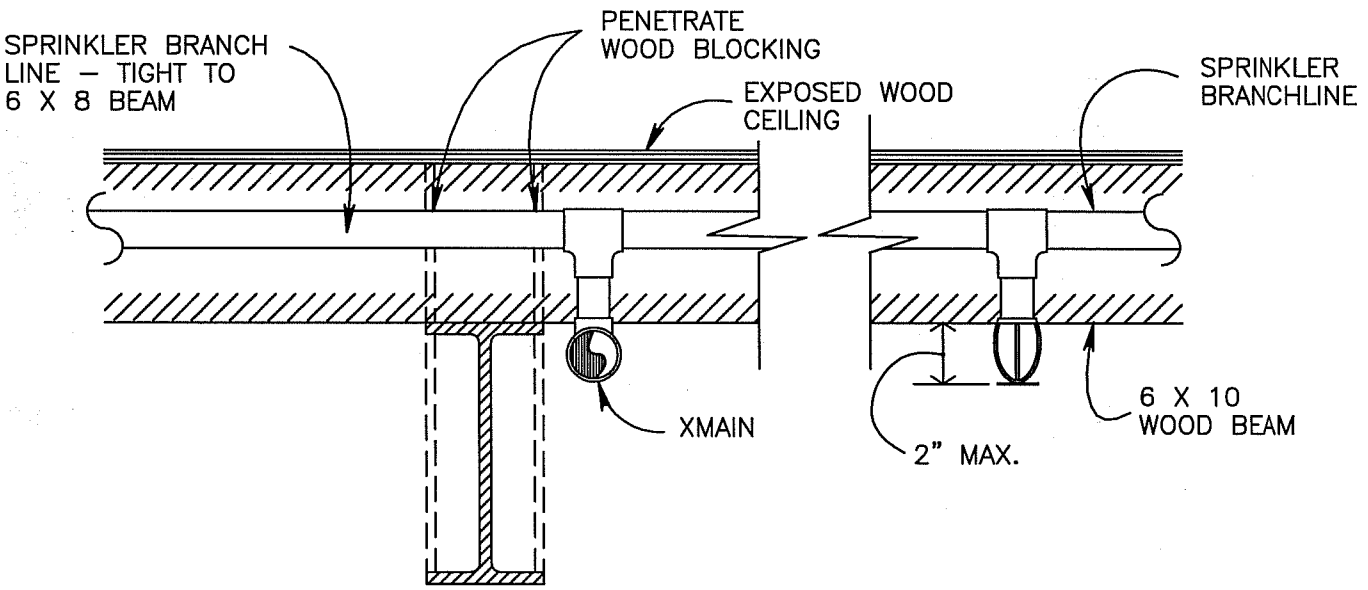

X
XX

BEAM PENETRATION DETAIL

SCALE: NONE

LBNL STANDARD BEAM PENETRATION DETAILS	DRAWN BY	DATE
	CHECKED BY	
	APPROVED BY	
	CAD FILE PATH	
	SCALE NTS	
UNIVERSITY OF CALIFORNIA LAWRENCE BERKELEY NATIONAL LABORATORY FACILITIES DIVISION	DRAWING NO. H138	SHEET
	PROJECT NO.	

T:\groups\ELECT\Romy\Mech_IHEM\HVAC_Details\H138 BEAM-PENET-1.dwg