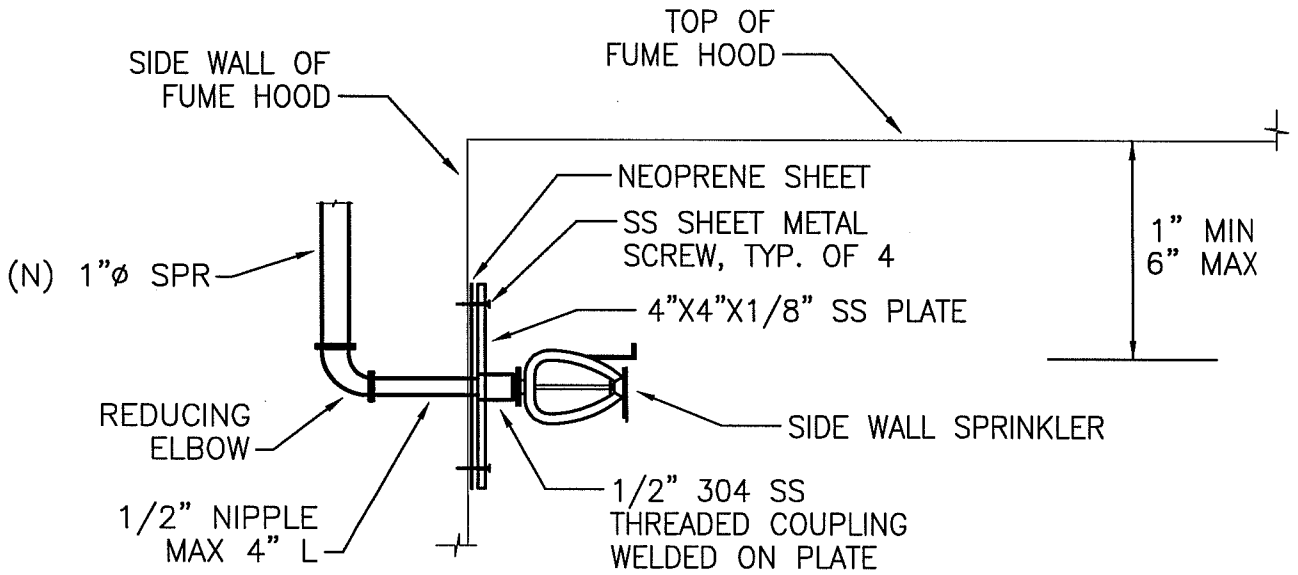

SPRINKLER INSIDE FUME HOOD SHALL BE GRINNELL SPRINKLER, RATED 200°F, WAX COATED TO BE CORROSION RESISTANT. NEW SPRINKLER PIPE SHALL MATCH EXISTING.

2
P3

FUME HOOD SPRINKLER DETAIL

SCALE: NONE

LBNL STANDARD
FUME HOOD SCHEDULE

DRAWN BY	DATE
CHECKED BY	
APPROVED BY	
CAD FILE PATH	
SCALE NTS	

UNIVERSITY OF CALIFORNIA LAWRENCE BERKELEY NATIONAL LABORATORY
FACILITIES DIVISION

DRAWING NO. H129
SHEET
PROJECT NO.

T:\groups\ELECT\Romy\Mech_IHEM\HVAC_Details\H129 FUME-HOOD-SPRINKLER.dwg