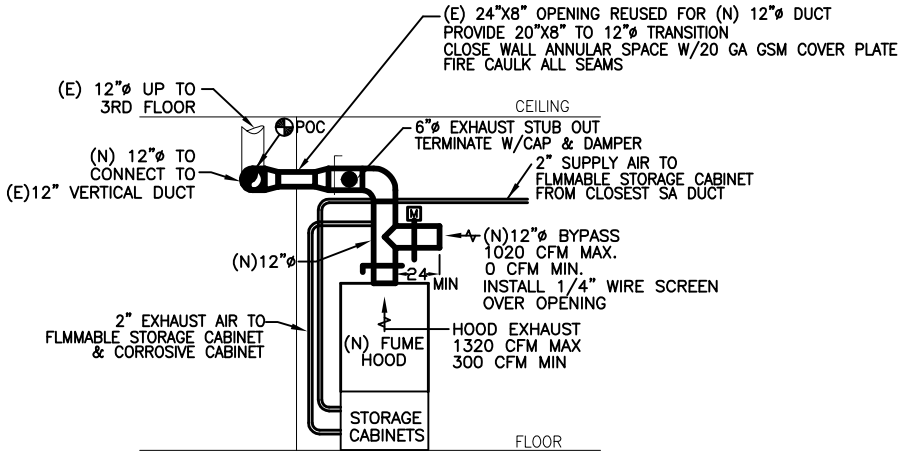

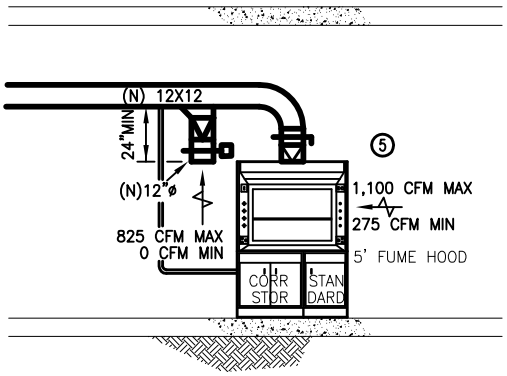

4 FLAMMABLE STORAGE CABINET UNDER FUME HOOD – CONNECT UPPER 2"ø OPENING TO COLD DUCT UPSTREAM OF DVAV BOX. CONNECT LOWER 2"ø OPENING TO FUME HOOD EXHAUST DUCT DOWNSTREAM OF CONTROL DAMPER. USE 2"ø SS 304 PIPES.

5 CORROSIVE STORAGE CABINET UNDER FUME HOOD – CONNECT BOTH UPPER & LOWER 2"ø OPENINGS TO ONE 2"ø SCHEDULE 40 PVC PIPE. CONNECT THIS PVC PIPE TO FUME HOOD EXHAUST DUCT DOWNSTREAM OF CONTROL DAMPER.

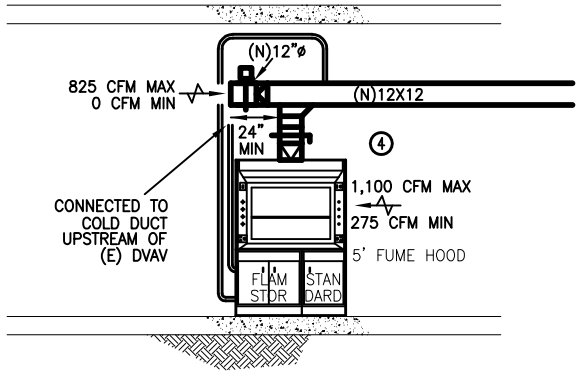

LBNL STANDARD
FUME HOOD CONNECTIONS

DRAWN BY	DATE
CHECKED BY	
APPROVED BY	
CAD FILE PATH	
SCALE NTS	

UNIVERSITY OF CALIFORNIA LAWRENCE BERKELEY NATIONAL LABORATORY

FACILITIES DIVISION

DRAWING NO. H127

SHEET

PROJECT NO.

T:\STDS\mech\mech-details\H127 FUME-HOOD-CONNECTIONS.dwg