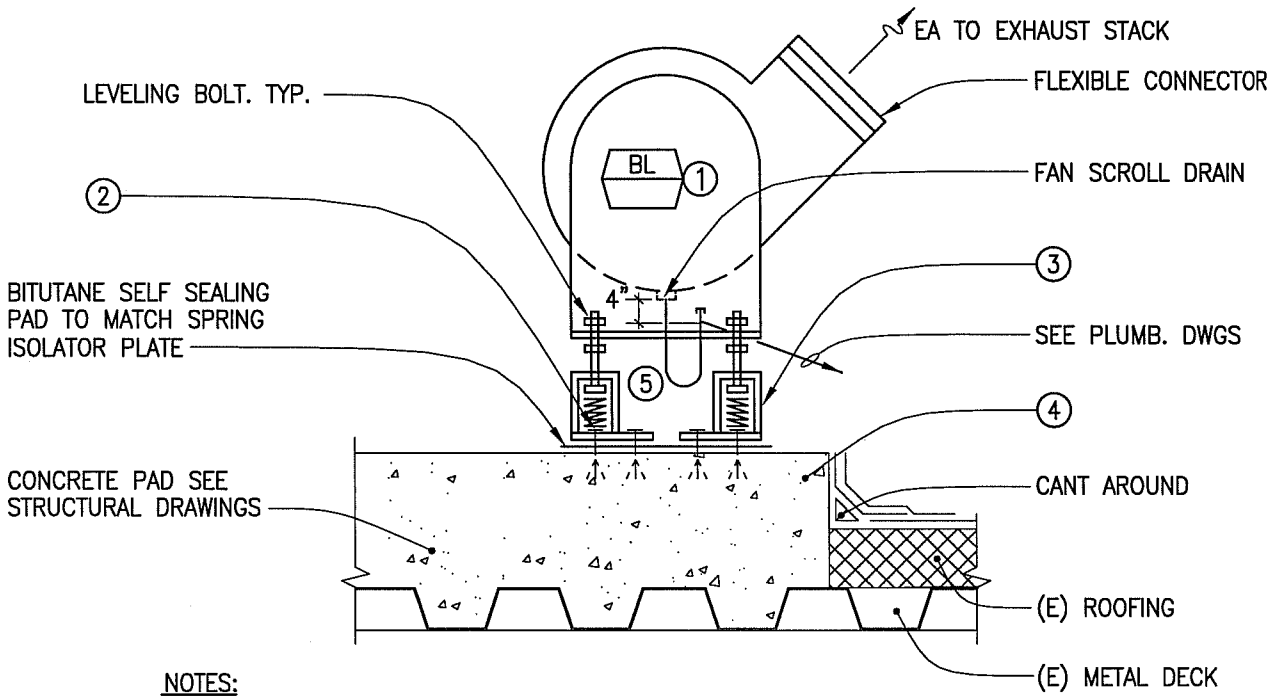

NOTES:

1. MOUNT FAN DEAD LEVEL.
2. CONC. ANCHORS SEE STRUCTURAL DRAWINGS.
3. MASON OR EQUAL. VIBRATION ISOLATORS. 4 REQUIRED.
4. HOUSE KEEPING PAD.
5. PROVIDE 7" TRAP.

X/XX

EXHAUST FAN SUPPORT ON ROOF

SCALE: NONE

LBNL STANDARD EXHAUST FAN SUPPORT ON ROOF	DRAWN BY	DATE
	CHECKED BY	
	APPROVED BY	
	CAD FILE PATH	
	SCALE NTS	
UNIVERSITY OF CALIFORNIA LAWRENCE BERKELEY NATIONAL LABORATORY FACILITIES DIVISION	DRAWING NO. H123	SHEET
	PROJECT NO.	

T:\groups\ELECT\Romy\Mech_IHEM\HVAC_Details\H123 EXH-FAN-ROOF-SUPP.dwg