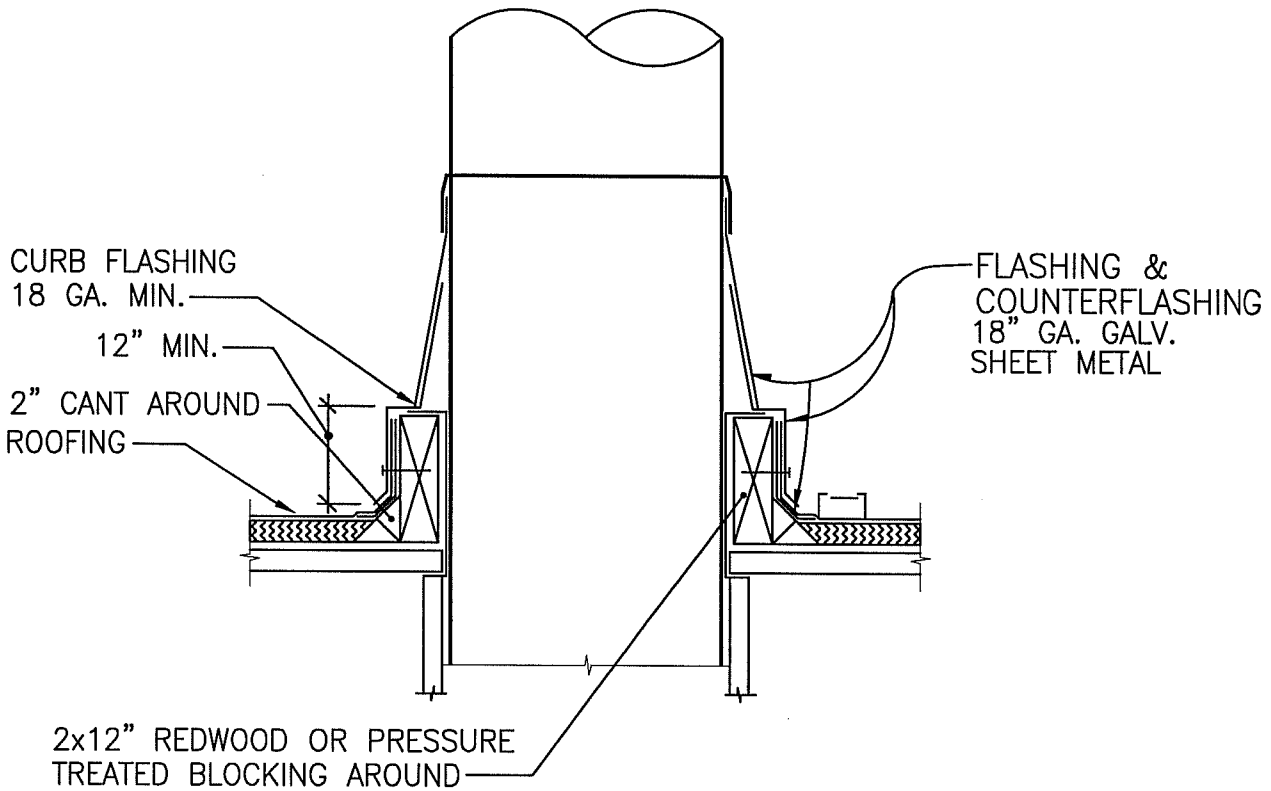

X
XX

DUCT THRU ROOF

SCALE: NONE

LBNL STANDARD DUCT THRU ROOF	DRAWN BY	DATE
	CHECKED BY	
	APPROVED BY	
	CAD FILE PATH	
	SCALE NTS	
UNIVERSITY OF CALIFORNIA LAWRENCE BERKELEY NATIONAL LABORATORY FACILITIES DIVISION	DRAWING NO. H121	SHEET
	PROJECT NO.	

T:\groups\ELECT\Romy\Mech_IHEM\HVAC_Details\H121 DUCT-THRU-ROOF-1.dwg