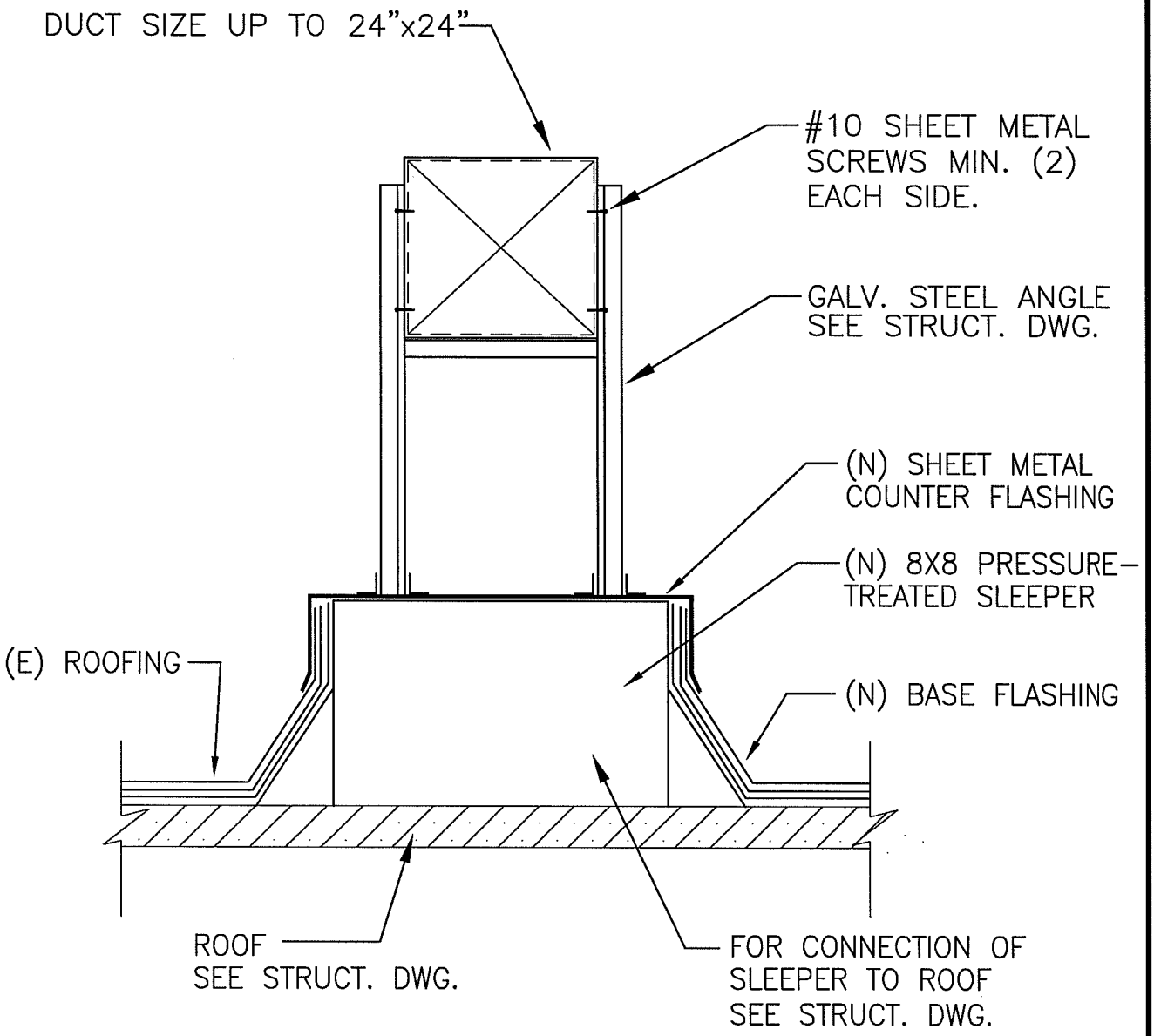

X/XX **DUCT SUPPORT DETAIL**

SCALE: NONE

LBNL STANDARD DUCT SUPPORT DETAIL	DRAWN BY	DATE
	CHECKED BY	
	APPROVED BY	
	CAD FILE PATH	
	SCALE NTS	
UNIVERSITY OF CALIFORNIA LAWRENCE BERKELEY NATIONAL LABORATORY FACILITIES DIVISION	DRAWING NO. H120	SHEET
	PROJECT NO.	

T:\groups\ELECT\Romy\Mech_IHEM\HVAC_Details\H120 DUCT-SUPP-DETAIL.dwg