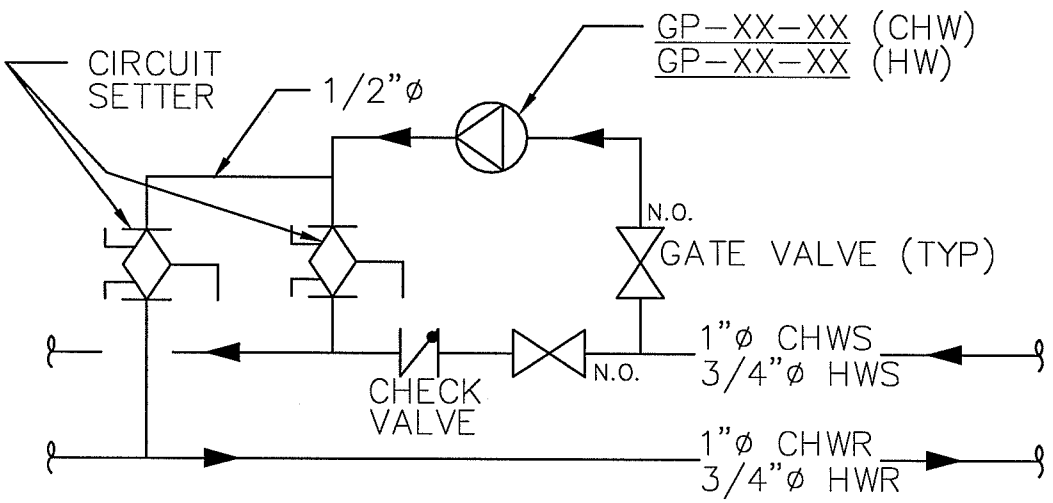

X
XX

CHWS & HWS BOOSTER PUMP PIPING CONNECTION

SCALE: NONE

LBNL STANDARD CHWS & HWS BOOSTER PUMP PIPING CONN.	DRAWN BY	DATE
	CHECKED BY	
	APPROVED BY	
	CAD FILE PATH	
	SCALE NTS	
UNIVERSITY OF CALIFORNIA LAWRENCE BERKELEY NATIONAL LABORATORY FACILITIES DIVISION	DRAWING NO. H112	SHEET
	PROJECT NO.	

T:\groups\ELECT\Romy\Mech_IHEM\HVAC_Details\H112 CHWS&HWS-BOOST-PUMP.dwg