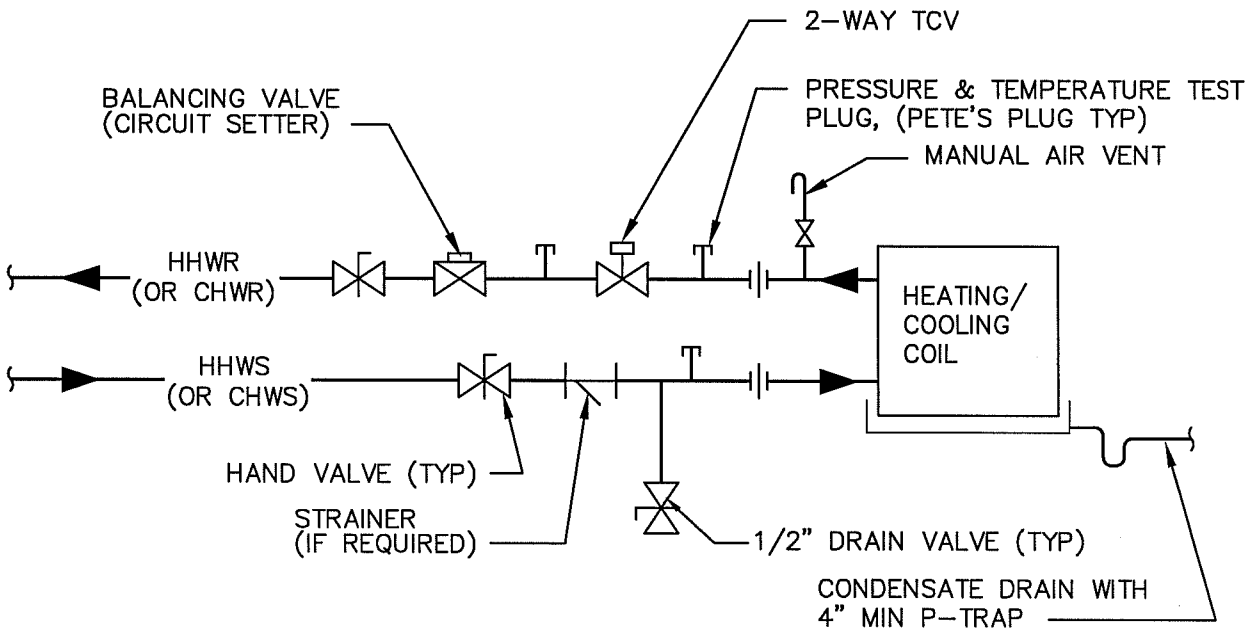

X
XX

2-WAY VALVE CONTROL HEATING/COOLING COIL PIPING DIAGRAM

SCALE: NONE

LBNL STANDARD 2WAY VALVE CONTROL HEAT/ COOL COIL DIAG	DRAWN BY	DATE
	CHECKED BY	
	APPROVED BY	
	CAD FILE PATH	
	SCALE NTS	
UNIVERSITY OF CALIFORNIA LAWRENCE BERKELEY NATIONAL LABORATORY FACILITIES DIVISION	DRAWING NO. H101	SHEET
	PROJECT NO.	

T:\groups\ELECT\Romy\Mech_IHEM\HVAC_Details\H101 2WAY-HEAT-COOL-DIAG.dwg