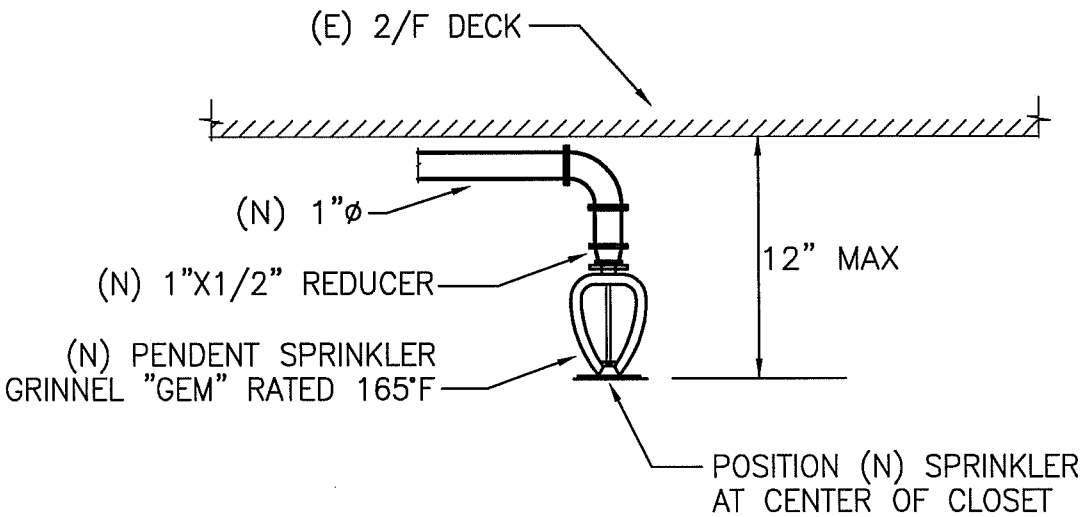

X
XX

SPRINKLER INSTALLATION DETAIL

SCALE: NONE

LBNL STANDARD SPRINKLER INSTALLATION DETAIL	DRAWN BY	DATE
	CHECKED BY	
	APPROVED BY	
	CAD FILE PATH	
	SCALE NTS	
UNIVERSITY OF CALIFORNIA LAWRENCE BERKELEY NATIONAL LABORATORY FACILITIES DIVISION	DRAWING NO. FP106	SHEET
	PROJECT NO.	

T:\groups\ELECT\Romy\Mech_IHEM\FireProtection\FP106 FIRE-SPR-6.dwg