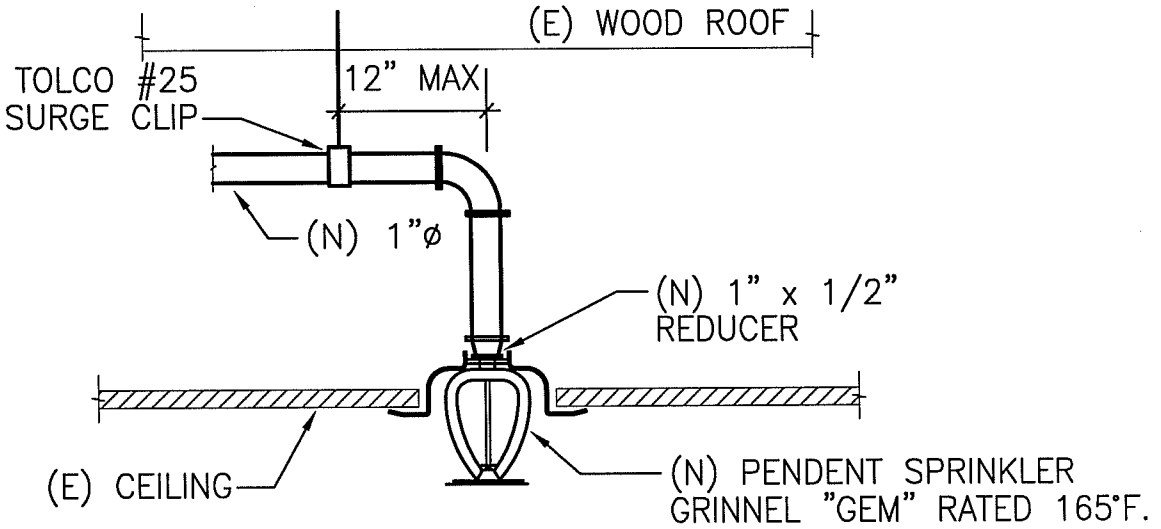

(N) SPRINKLER PIPES SHALL BE TESTED AT 200 PSI FOR 2 HOURS OR 50 PSIG ABOVE STATIC PRESSURE IF STATIC PRESSURE IS ABOVE 150 PSI.

X / XX

SPRINKLER INSTALLATION DETAIL

SCALE: NONE

G:\MECHANICAL_IHEM\MASTER DOCUMETS\CONSTRUCTION STANDARDS\DETAILS\FIRE-SPR-2.DWG

LBNL STANDARD SPRINKLER INSTALLATION DETAIL	DRAWN BY	DATE
	CHECKED BY	
	APPROVED BY	
	CAD FILE PATH	
	SCALE NTS	
UNIVERSITY OF CALIFORNIA LAWRENCE BERKELEY NATIONAL LABORATORY FACILITIES DIVISION	DRAWING NO. FP102	SHEET
	PROJECT NO.	

T:\groups\ELECT\Romy\Mech_IHEM\FireProtection\FP102 FIRE-SPR-2.dwg