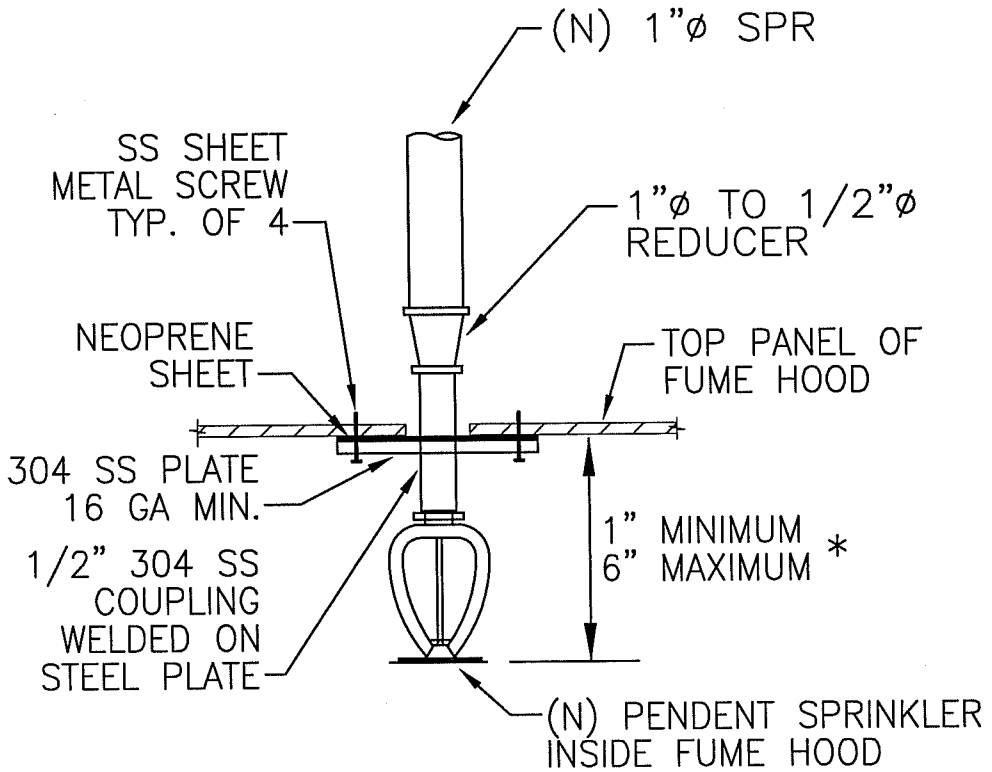

* IF A SIDEWALL SPRINKLER IS USED, THE DEFLECTOR SHALL BE THE SAME DISTANCE FROM THE TOP PANEL OF FUME HOOD.

X
XX

FIRE SPRINKLER DETAIL

SCALE: NONE

LBNL STANDARD FIRE SPRINKLER DETAIL	DRAWN BY	DATE
	CHECKED BY	
	APPROVED BY	
	CAD FILE PATH	
	SCALE NTS	
UNIVERSITY OF CALIFORNIA LAWRENCE BERKELEY NATIONAL LABORATORY FACILITIES DIVISION	DRAWING NO. FP101	SHEET
	PROJECT NO.	

T:\groups\ELECT\Romy\Mech_IHEM\FireProtection\FP101 FIRE-SPR-1.dwg