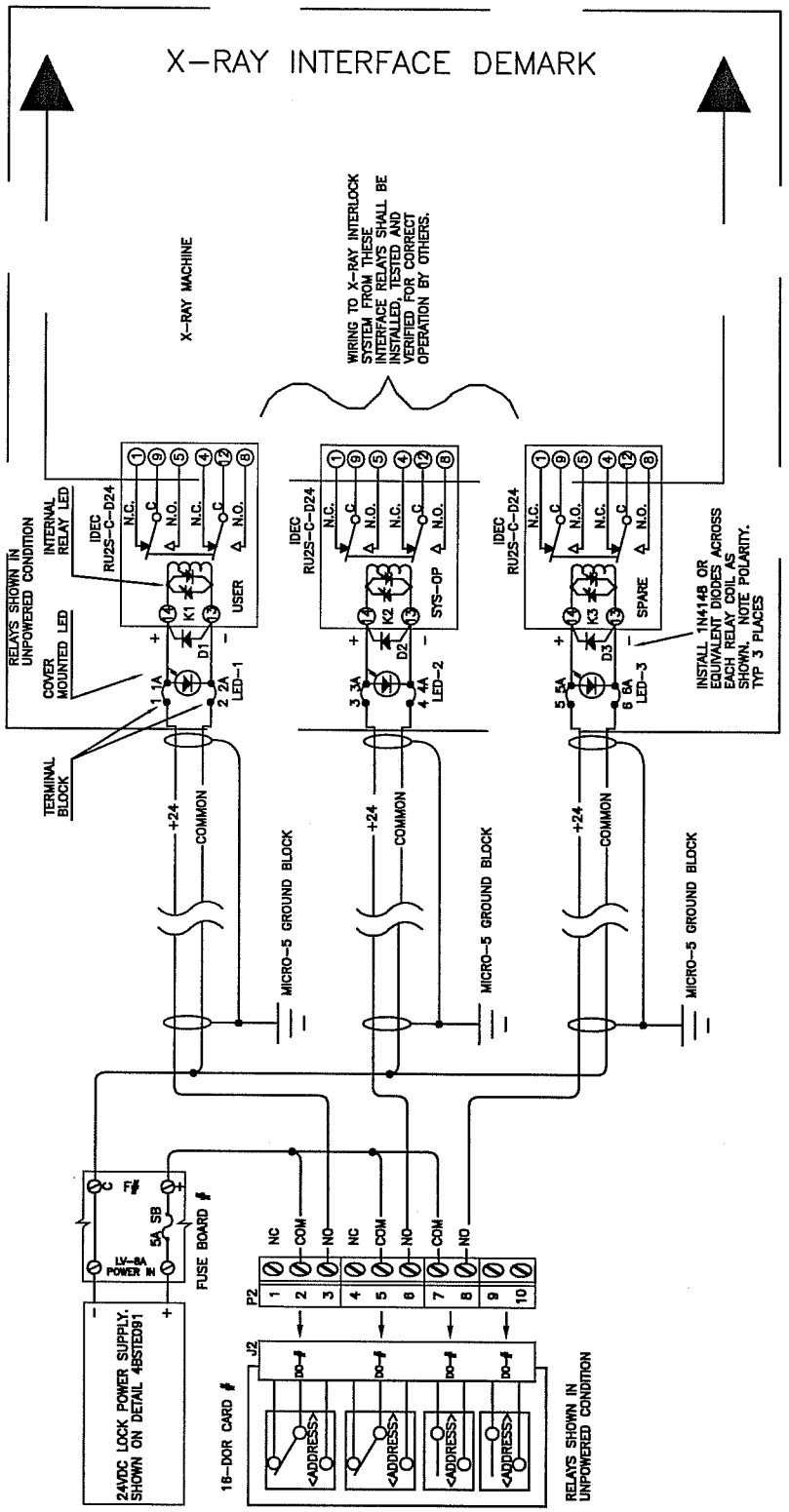

LBNL ELECTRICAL STANDARDS
SECURITY CARD ACCESS
TYPICAL X-RAY INTERLOCK RELAY WIRING

UNIVERSITY OF CALIFORNIA LAWRENCE BERKELEY NATIONAL LABORATORY

FACILITIES DIVISION

DRAWN BY		DATE
CHECKED BY		
APPROVED BY		
CAD FILE PATH		
SCALE	NTS	
DRAWING NO.	SEC155	SHEET
PROJECT NO.		

T:\groups\ELECT\Romy\STD\Security Card\SEC155 TYPICAL X-RAY INTERLOCK RELAY WIRING.dwg