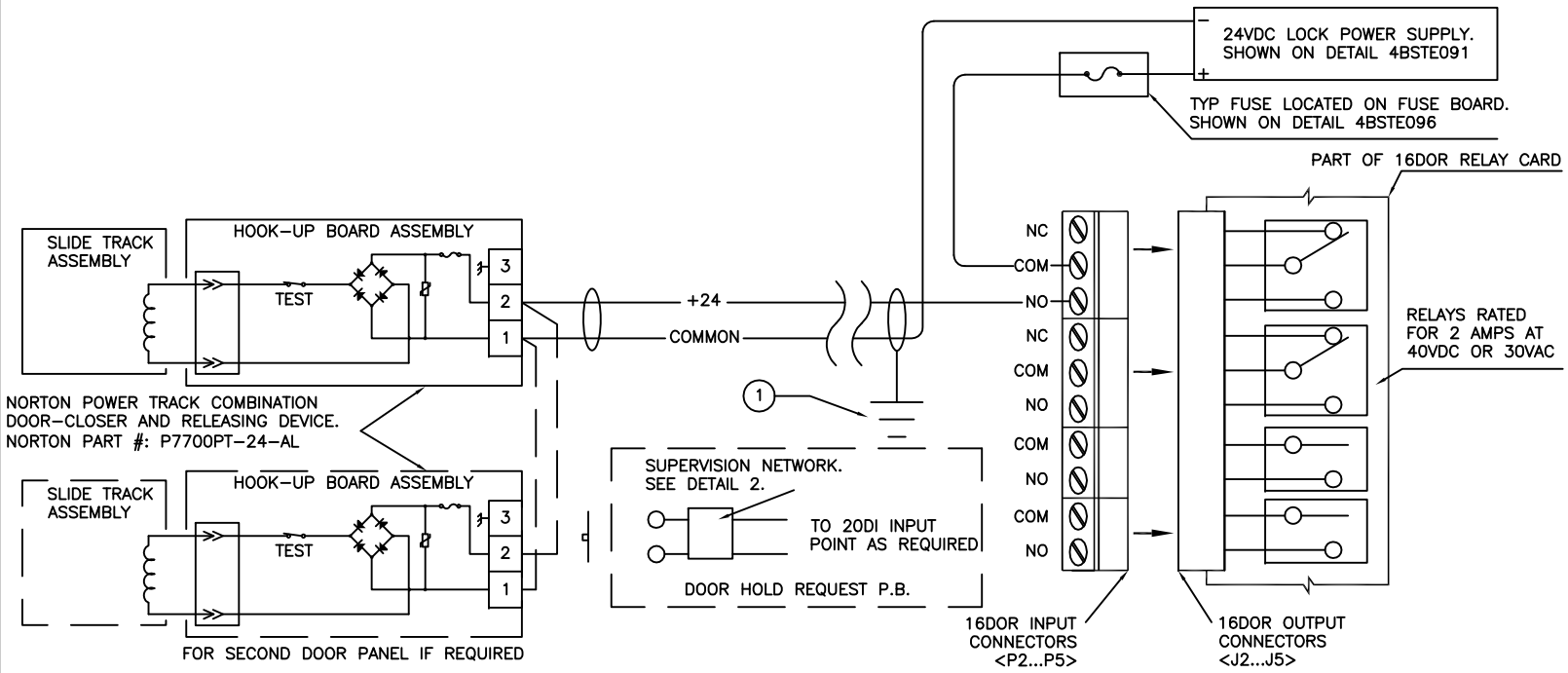

9

TYP MAGNETIC DOOR HOLDER-CLOSER WIRING DIAG

SCALE: NONE

LBNL ELECTRICAL STANDARDS

SECURITY CARD ACCESS

TYP MAGNETIC DOOR HOLDER-CLOSER WIRING DIAG

UNIVERSITY OF CALIFORNIA LAWRENCE BERKELEY NATIONAL LABORATORY

FACILITIES DIVISION

DRAWN BY		DATE
CHECKED BY		
APPROVED BY		
CAD FILE PATH		
SCALE	NTS	
DRAWING NO.	SEC151	SHEET
PROJECT NO.		