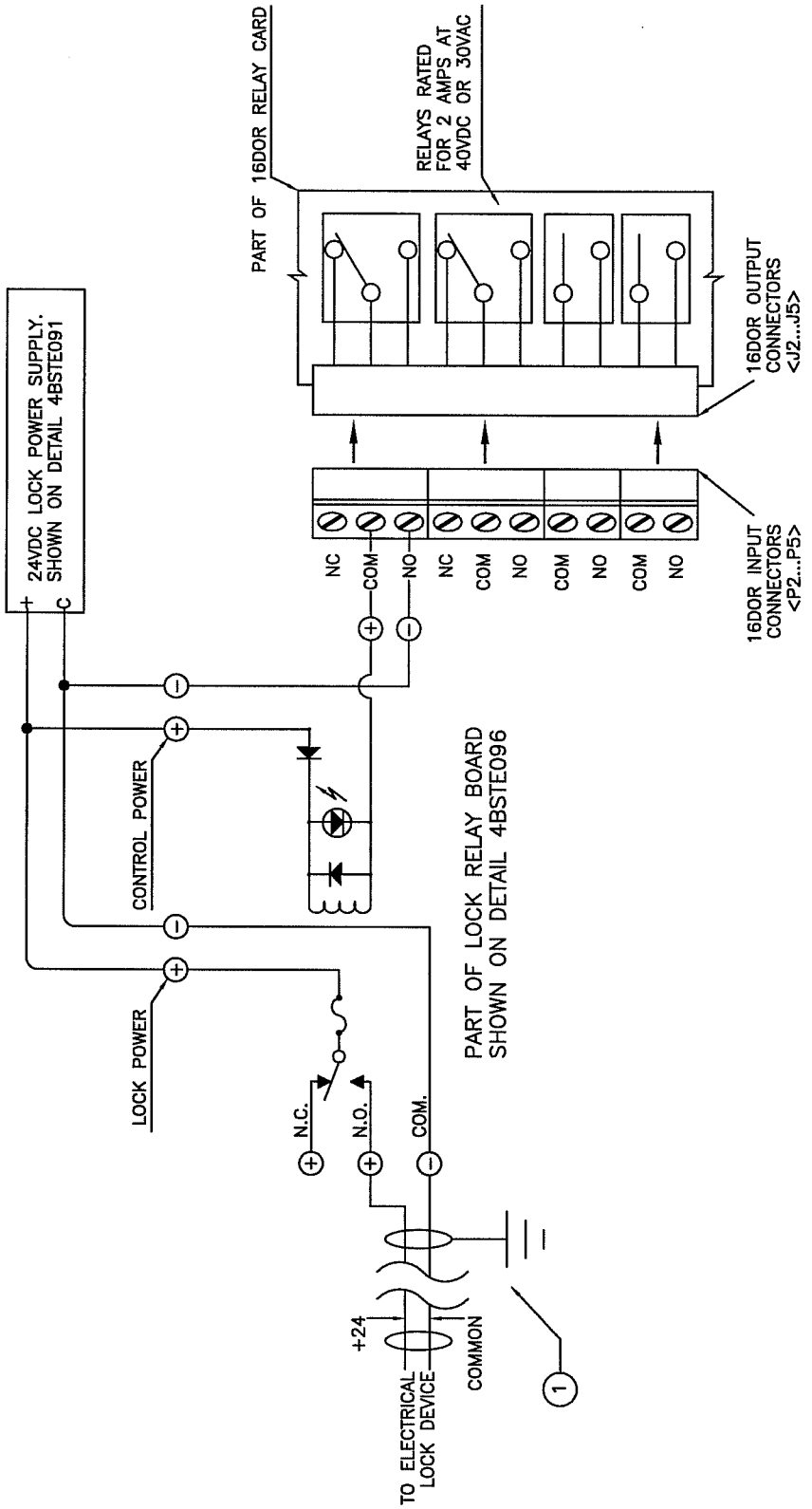


5 TYP 16DOR TO LOCK RELAY BOARD WIRING

SCALE: NONE

LBNL ELECTRICAL STANDARDS
SECURITY CARD ACCESS
TYP 16DOR TO LOCK RELAY BOARD WIRING

| | | |
|---|---|---|
| DRAWN BY | | DATE |
| CHECKED BY | | |
| APPROVED BY | | |
| CAD FILE PATH | | |
| SCALE NTS | | |
| DRAWING NO. SEC147 | | SHEET |
| PROJECT NO. | | |

UNIVERSITY OF CALIFORNIA LAWRENCE BERKELEY NATIONAL LABORATORY
FACILITIES DIVISION

T:\groups\ELECT\Romy\STD\Security Card\SEC147 TYP 16DOR TO LOCK RELAY BOARD WIRING.dwg