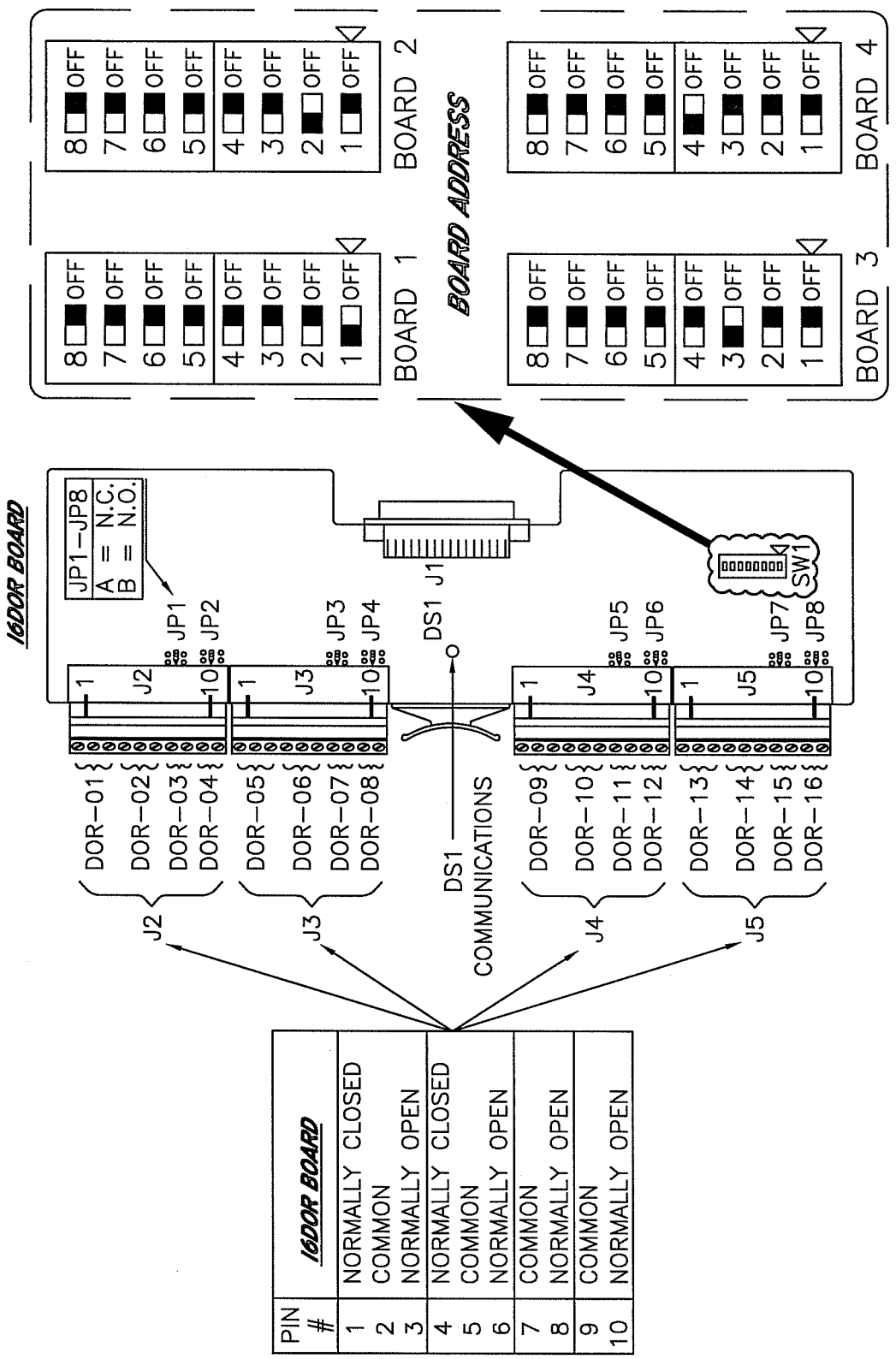

PIN #	16DOR BOARD
1	NORMALLY CLOSED
2	COMMON
3	NORMALLY OPEN
4	NORMALLY CLOSED
5	COMMON
6	NORMALLY OPEN
7	COMMON
8	NORMALLY OPEN
9	COMMON
10	NORMALLY OPEN

4 TYP 16DOR WIRING DIAGRAM

SCALE: NONE

LBNL ELECTRICAL STANDARDS
SECURITY CARD ACCESS
TYP 16DOR WIRING DIAGRAM

UNIVERSITY OF CALIFORNIA LAWRENCE BERKELEY NATIONAL LABORATORY
FACILITIES DIVISION

DRAWN BY	DATE	
CHECKED BY		
APPROVED BY		
CAD FILE PATH		
SCALE NTS		
DRAWING NO. SEC146		SHEET
PROJECT NO.		

T:\groups\ELECT\Romy\STD\Security Card\SEC146 TYP 16DOR WIRING DIAGRAM.dwg