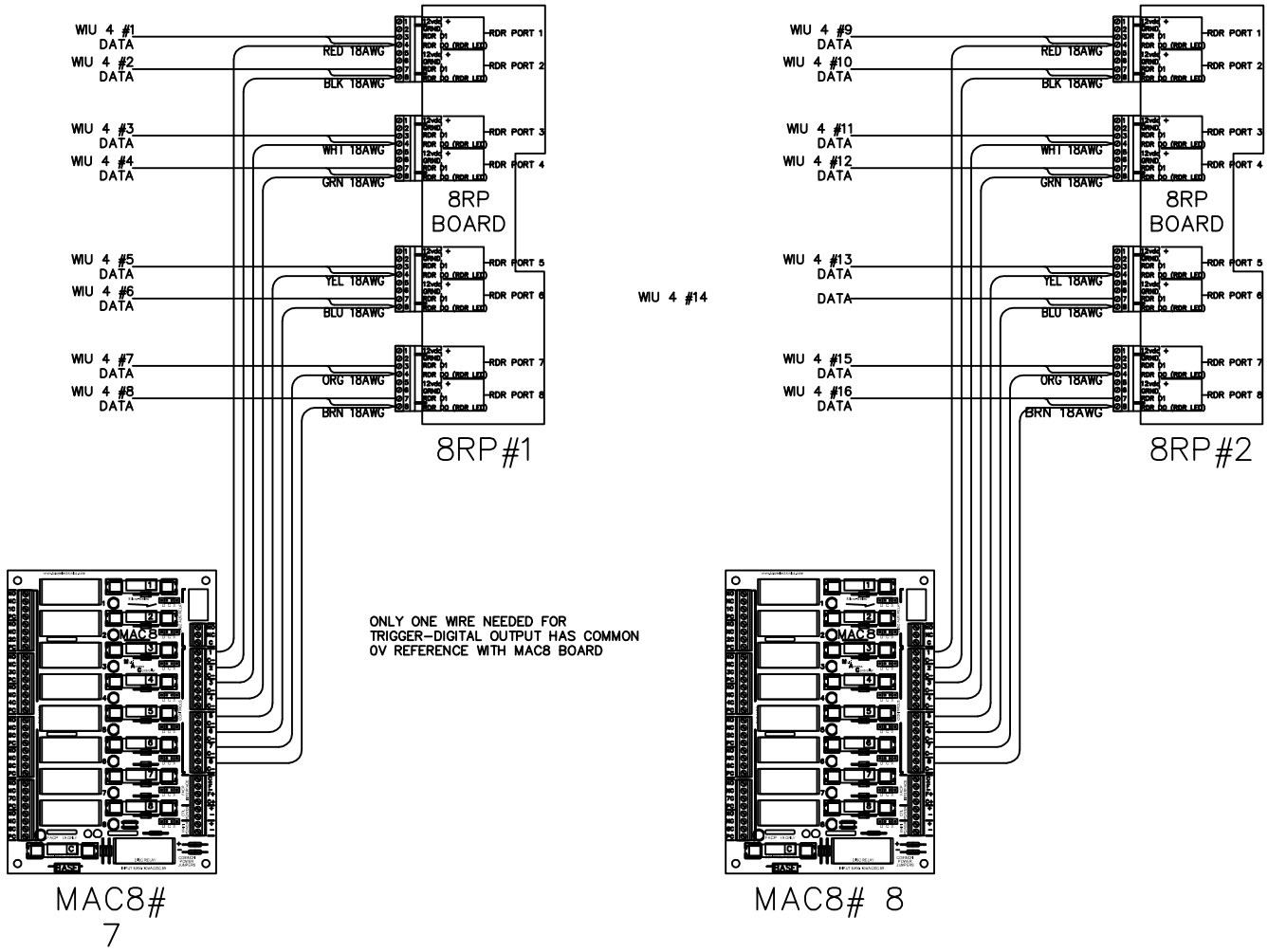

8 MICRO/5 #2 8RP BOARD PNT. TO PNT.

SCALE: NO SCALE

LBNL ELECTRICAL STANDARDS
SECURITY CARD ACCESS SE5.70
MICRO/5 #2 8RP BOARD PNT. TO PNT.

DRAWN BY	DATE
CHECKED BY	
APPROVED BY	
CAD FILE PATH	
SCALE NTS	

UNIVERSITY OF CALIFORNIA LAWRENCE BERKELEY NATIONAL LABORATORY
FACILITIES DIVISION

DRAWING NO. SEC119A
PROJECT NO.
SHEET 8