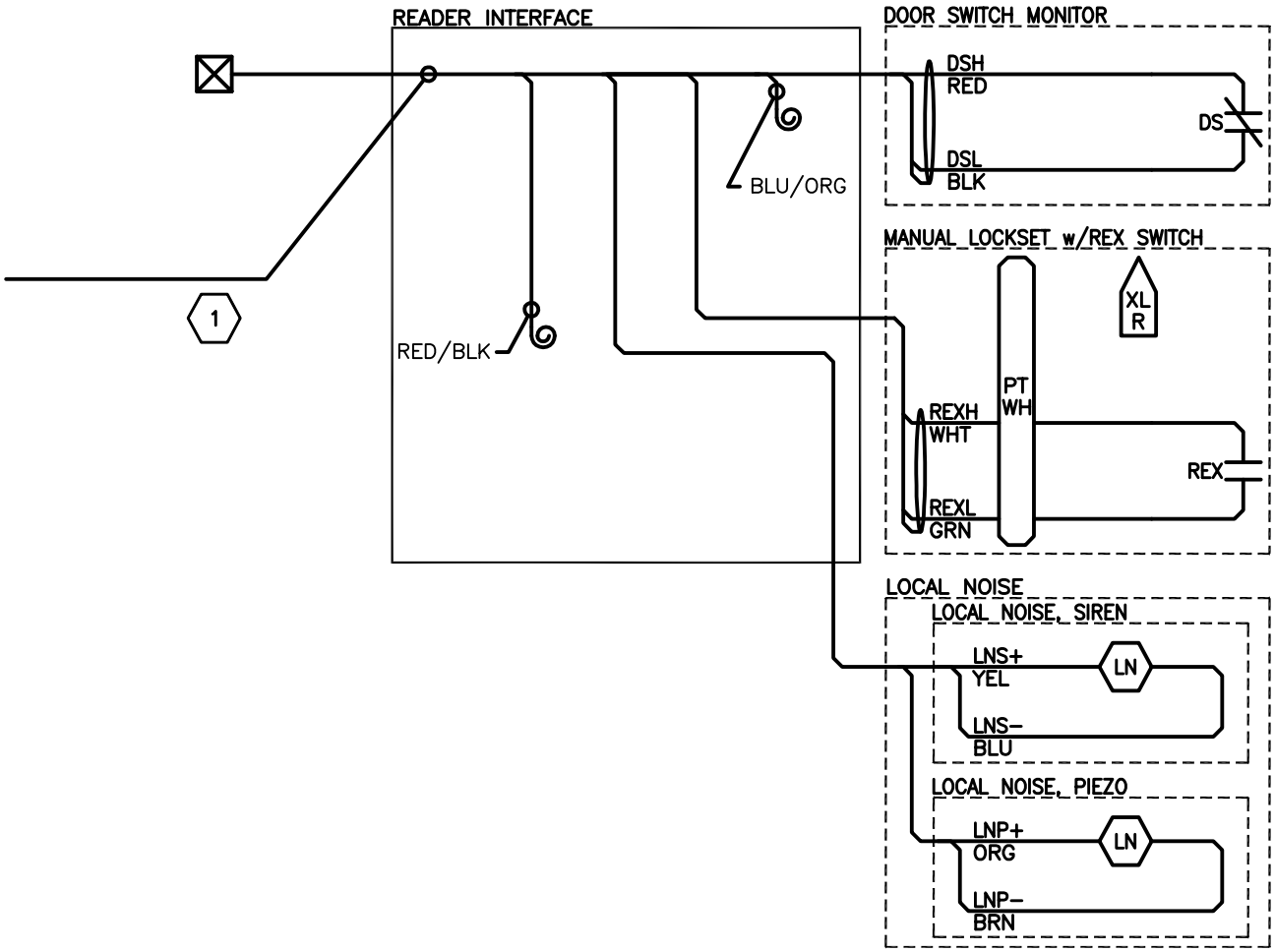

POINT–TO–POINT NOTES

1. TAG CABLE WITH CODE AND NUMBER SPECIFIC TO THIS POINT PER PLAN AND SCHEDULE. TAG INDIVIDUAL WIRES AS SHOWN. REFERENCE STANDARD CRITERIA DRAWING 00.05.501–505.
2. LEAVE 20' SERVICE LOOP FOR CONNECTIONS TO DOOR BOARD, PIEZO & SIREN, AND LOCK HARDWARE.

GB-3 SINGLE DOOR, ALARMED/FREE EXIT
MANUAL LOCKSET w/REX SWITCH, LOCAL NOISE (SIREN & PIEZO)
POINT-TO-POINT SCALE: N.T.S.

LBNL ELECTRICAL STANDARDS
SECURITY CARD ACCESS GB–3
SINGLE DOOR ALARMED/FREE EXIT MANUAL LOCKSET

DRAWN BY	DATE
CHECKED BY	
APPROVED BY	
CAD FILE PATH	
SCALE NTS	
DRAWING NO. SEC106A	SHEET GB–3
PROJECT NO.	

UNIVERSITY OF CALIFORNIA LAWRENCE BERKELEY NATIONAL LABORATORY
FACILITIES DIVISION