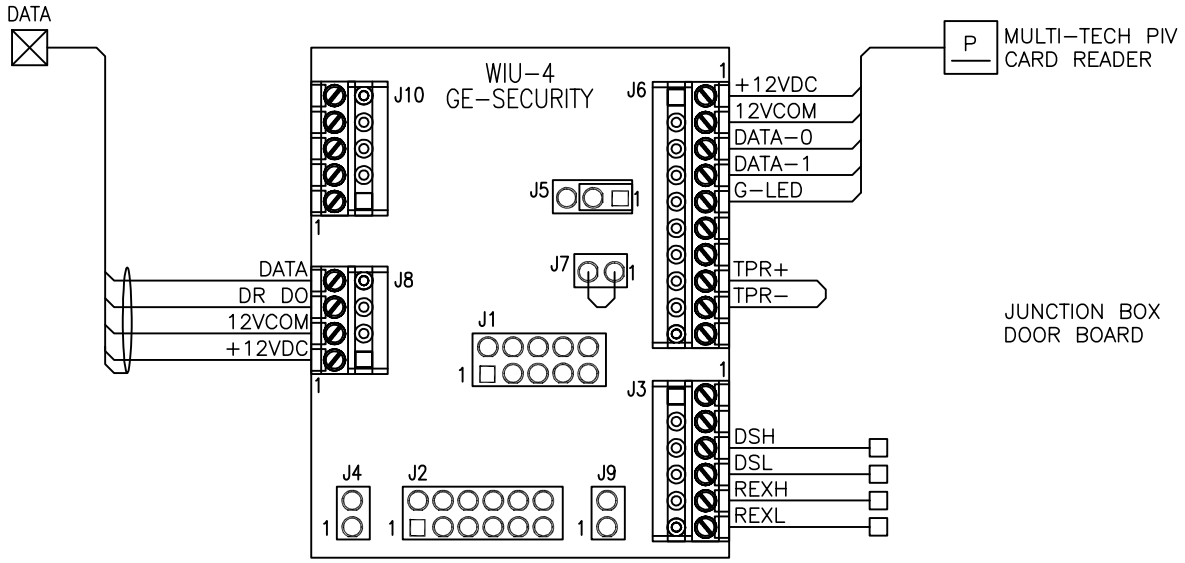

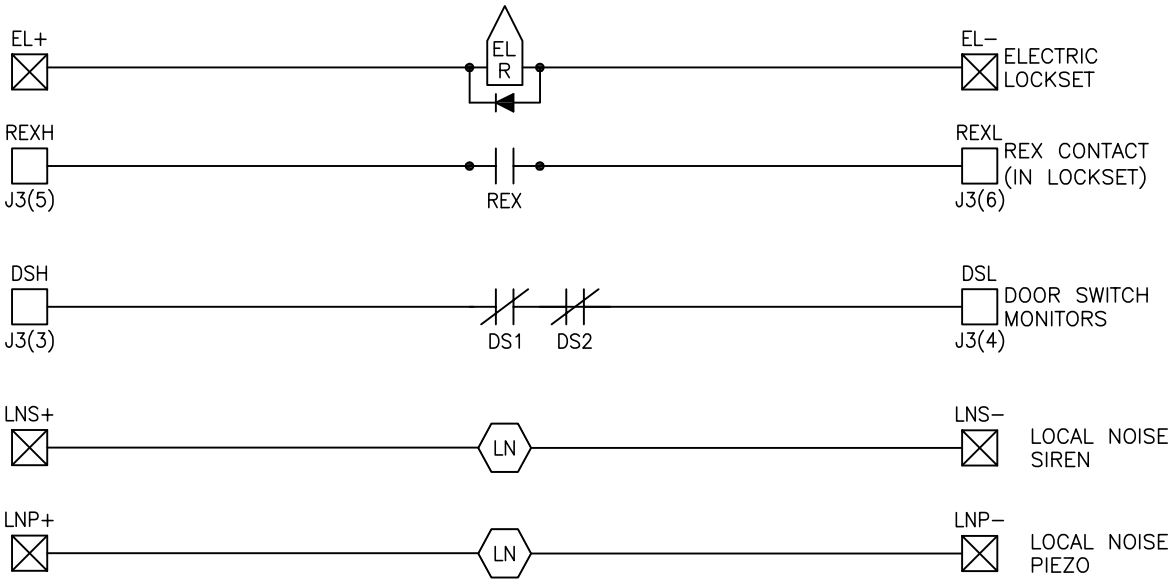

BA-4

DOUBLE DOOR, CARD IN/FREE EXIT
ELECTRIC LOCKSET w/REX SWITCH
LOCAL NOISE (SIREN & PIEZO), 24VDC FAIL SECURE

LADDER

SCALE: N.T.S.

LBNL ELECTRICAL STANDARDS
SECURITY CARD ACCESS BA-4
DOUBLE DOOR, CARD IN/FREE EXIT ELECTRIC LOCKSET

DRAWN BY	DATE
CHECKED BY	
APPROVED BY	
CAD FILE PATH	
SCALE NTS	
DRAWING NO. SEC103A	SHEET BA-4
PROJECT NO.	

UNIVERSITY OF CALIFORNIA LAWRENCE BERKELEY NATIONAL LABORATORY
FACILITIES DIVISION